CDX-U8000

SERVICE MANUAL

US Model
Canadian Model
E Model

COMPACT disc DIGITAL AUDIO

Model Name Using Similar Mechanism	CDX-7580
CD Drive Mechanism Type	MG-200W-33

SPECIFICATIONS

CD player section

System	Compact disc digital audio system
Frequency response	10 Hz – 20,000 Hz ±3 dB
Wow and flutter	Below the measurable limit
Signal-to-noise ratio	100 dB
Distortion	0.008 %
Laser Diode Properties	
	Material GaAlAs Wavelength 780 nm Emission duration Continuous Laser output power Less than 44.6 μW* * This output is the value measured at a distance of 200 mm from the objective lens surface on the Optical Pickup Block.

Tuner section

FM

Tuning range	87.9 – 107.9 MHz
Antenna terminal	External antenna connector
Intermediate frequency	10.7 MHz
Selectivity	75 dB at 400 kHz
Signal-to-noise ratio	65 dB (stereo), 70 dB (mono)
Harmonic distortion at 1 kHz	0.5% (stereo), 0.3% (mono)
Separation	35 dB at 1 kHz
Frequency response	30 Hz – 15,000 Hz ±3 dB

AM

Tuning range	530 – 1,710 kHz
Antenna terminal	External antenna connector
Intermediate frequency	450 kHz
Sensitivity	35μV
Signal-to-noise ratio	55 dB
Harmonic distortion at 1 kHz	0.3%

General

Output lead	Power antenna relay control lead Power amplifier control lead
Tone controls	Bass ±10 dB at 100 Hz Treble ±10 dB at 10 kHz
Loudness	+10 dB at 100 Hz +6 dB at 10 kHz
Power requirements	12 V DC car battery (negative ground)
Dimensions	Approx. 178 × 50 × 169 mm ($7^1/_8 \times 2 \times 6^3/_4$ inches) (w/h/d), not incl. projecting parts and controls
Mounting dimensions	Approx. 182 × 53 × 148 mm ($7^1/_4 \times 2^1/_8 \times 5^7/_8$ inches) (w/h/d), not incl. projecting parts and controls
Weight	Approx. 1.6 kg (3 lb 8 oz)
Accessories supplied	Mounting hardware (1 set) Power input lead (1) Front panel case (1)
Optional accessory	
	Remote commander RM-X25

Design and specifications subject to change without notice.

使用時は添付資料も参照のこと
Refer to the additional documents.

FM/AM COMPACT DISC PLAYER

SONY®

TABLE OF CONTENTS

Section	Title	Page
	Specifications	1
	Servicing Note	
	1. Flexible Circuit Board Repairing	2
	2. Removing the Flat Package IC	2
	3. Procedure of Replacing the Flexible PC Film of the Display Board	3
SECTION 1.	**GENERAL**	
	Features	4
	Precautions	4
	Location and Function of Controls	5
	Detaching and Attaching the Front Panel	7
	Installation	8
	Connections	9
SECTION 2.	**IC PIN DESCRIPTION**	
	2-1. Master Micrcomputer IC504 (μPD75518GF-029-3B9)	11
	2-2. Tuner Microcomputer IC601 (μPD75116GF-F40-3BE)	17
	2-3. Tuner Microcomputer IC603 (LC7216M)	20
	2-4. Key Display Microcomputer IC802 (μPD75008GB-679-3B4)	21
SECTION 3.	**MECHANICAL ADJUSTMENTS**	23
SECTION 4.	**ELECTRICAL ADJUSTMENTS**	23
SECTION 5.	**DIAGRAMS**	
	5-1. Block Diagram	27
	5-2. Printed Wiring Boards (MD Section)	32
	5-3. Schematic Diagram (MD Section)	35
	5-4. Semiconductor Lead Layouts	37
	5-5. Printed Wiring Boards (Main Section)	38
	5-6. Schematic Diagram (Main Section)	41
	5-7. Schematic Diagram (Display Section)	45
	5-8. Printed Wiring Boards (Display Section)	49
	5-9. Waveforms	51
	5-10. IC Block Diagram	53
SECTION 6.	**EXPLODED VIEWS**	
	1. General Section (1)	55
	2. General Section (2)	56
	3. MD Section (1)	57
	4. MD Section (2)	58
	5. MD Section (3)	59
SECTION 7.	**ELECTRICAL PARTS LIST**	60

SAFETY-RELATED COMPONENT WARNING!!

COMPONENTS IDENTIFIED BY MARK ⚠ OR DOTTED LINE WITH MARK ⚠ ON THE SCHEMATIC DIAGRAMS AND IN THE PARTS LIST ARE CRITICAL TO SAFE OPERATION. REPLACE THESE COMPONENTS WITH SONY PARTS WHOSE PART NUMBERS APPEAR AS SHOWN IN THIS MANUAL OR IN SUPPLEMENTS PUBLISHED BY SONY.

SERVICING NOTE

1) Flexible Circuit Board Repairing

- Keep the temperature of the soldering iron around 270°C during repairing.
- Do not touch the soldering iron on the same conductor of the circuit board (within 3 times).
- Be careful not to apply force on the conductor when soldering or unsoldering.

Notes on chip component replacement

- Never reuse a disconnected chip component.
- Notice that the minus side of a tantalum capacitor may be damaged by heat.

2) Removing the Flat Package IC

1. Prepare an enameled wire (0.3mm diameter) and apply it to the back side of the IC pins as illustrated below.

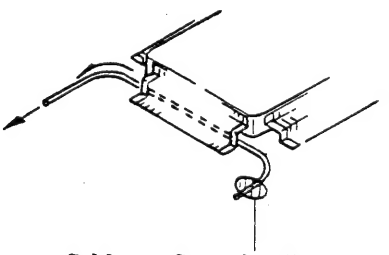

Solder or fix with adhesive tape.

2. Heat the IC pin with the soldering iron and draw the enameled wire so that the IC pin is removed from the pattern as illustrated.

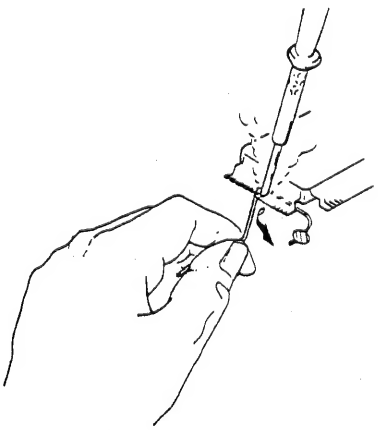

ATTENTION AU COMPOSANT AYANT RAPPORT À LA SÉCURITÉ!

LES COMPOSANTS IDENTIFIÉS PAR UNE MARQUE ⚠ SUR LES DIAGRAMMES SCHÉMATIQUES ET LA LISTE DES PIÈCES SONT CRITIQUES POUR LA SÉCURITÉ DE FONCTIONNEMENT. NE REMPLACER CES COMPOSANTS QUE PAR DES PIÈCES SONY DONT LES NUMÉROS SONT DONNÉS DANS CE MANUEL OU DANS LES SUPPLÉMENTS PUBLIÉS PAR SONY.

3) Procedure of Replacing the Flexible PC Film of the Display Board.

①

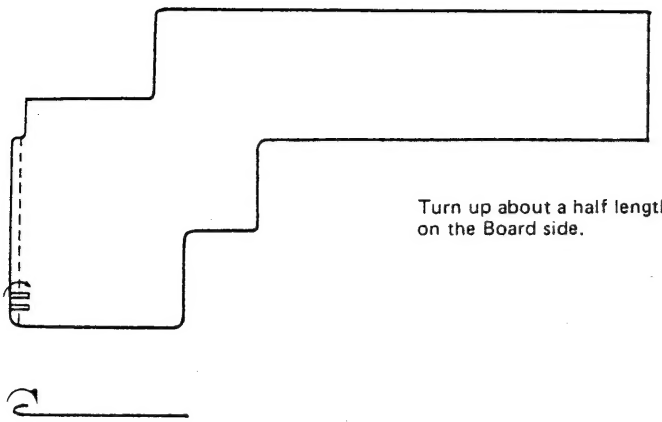

②

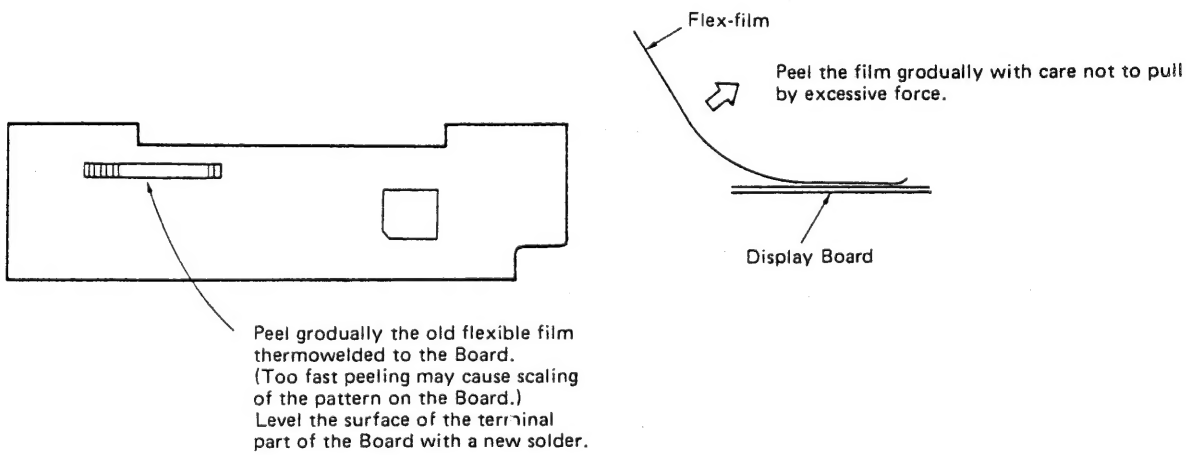

③

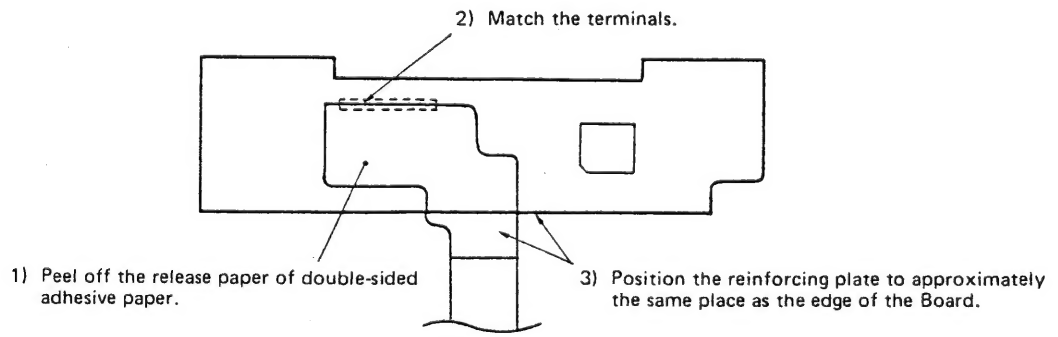

Peel off the release paper of the double-sided adhesive paper on the flexible film. Then position the flexible film on the Board correcting, and attach the film to the Board. Solder each terminal.

* Care should be taken not to peel the pattern on the flexible film. Excessive heating of the terminals directing with a soldering iron may peel the pattern of the flexible film.

Features

General

- **Full-logic feather touch system** for easy and smooth operation.
- **Large-and-wide-sized LCD** for displaying the operation modes clearly.
- Switchable **two color illumination (amber and green).** (page 8)
- Provided with a **digital 12-hour clock.**

- **Telephone-mute function** for decreasing the volume automatically with a telephone call.
- **Detachable-front panel** enables you to take the front panel away with you when you leave your car. (page 11)
- **Caution alarm** will be activated if you turn off the ignition key without removing the front panel from the unit.
- **WALKMAN input jack** for connecting a WALKMAN* etc.
- Optional wireless remote commander (not supplied). (page 9)

* WALKMAN is a trademark of the Sony Corporation.

Tuner section

- **SSIR (Sony Super Interference Rejection) PLL (Phase-Locked Loop) synthesizer tuner.**
- Provided with a **FM diversity reception system** for a better radio reception.
- Up to 30 stations can be preset: 20 stations on FM and 10 stations on AM.
- **BTM (Best Tuning Memory) function** automatically selects and stores the stations with strong signals on the preset number buttons in order of frequency.
- **Station memo function** for displaying the name of each radio station.

CD section

- **1 bit DAC (Digital-to-Analog Converter) for a clear sound reproduction.**
- A 3-inch (8 cm) CD can be played without an adaptor. (CD player only)
- **Quick recovery mechanism** to avoid any sound skipping.
- **Shuffle play function** for playing tracks in a random order.
- **AMS (Automatic Music Sensor) function** for automatically locating the beginning of a track during CD play.
- **Intro scan function** for playing the first 10 seconds of each track.
- **Repeat play function** for listening to a currently playing track repeatedly.
- **Manual search function** for locating a desired point in a track.
- **Several Sony CD changers (not supplied) can be connected and controlled** by the use of the Sony source selector (not supplied) with the unit.
- **Direct disc selection**** for selecting discs directly with the numerical keys.
- **Disc memo function**** for displaying the title of each disc and setting a PLAY/SKIP mode on each track.
- **Disc scan function**** for playing the first 10 seconds of all the discs.
- **Bank function** for playing only selected tracks on the disc.

** When the optional CD changer(s) is connected

TV tuner section

(when the optional TV monitor and hide-away TV tuner are connected)

- **UNILINK system** enables an optional video deck to be controlled by its remote controller through this unit.
- **Station memo function** for displaying the names of TV stations on the TV screen.

- **Simultaneous play function** for listening to CD or cassette playback with a WALKMAN while watching the TV or video.
- **List up function** enables CD titles and the contents of preset memory to be displayed on the TV monitor.

Precautions

- Before operating the unit for the first time or after replacing the car battery, press the reset button on the front panel with a ball-point pen etc., and then start operating the unit.
- If your car was parked in direct sunlight resulting in a considerable rise in temperature inside the car, allow the unit to cool off before operating it.
- If no power is being supplied to the unit, check the connections first. If everything is in order, check the fuse.
- As the laser beam used in this compact disc player is harmful to the eyes, do not attempt to disassemble the cabinet. Refer servicing to qualified personnel only.

Note on moisture condensation

On a rainy day or in a very damp environment, moisture in the atmosphere may condense on the lenses inside the unit. Should this occur, the unit may not operate properly. In such a case, remove the disc inside and wait for about an hour or so until the moisture has evaporated.

If you have any questions or problems concerning your unit that are not covered in this manual, please consult your nearest Sony dealer.

Notes on discs

Handle the disc by its edge, and to keep the disc clean, do not touch the surface.

This way

Do not attach any paper or tape.

Not this way

Do not expose the disc to direct sunlight or heat sources such as hot air-ducts, or leave it in a car parked in direct sunlight where there can be a considerable rise in the temperature.

Cleaning discs

Before playing, clean the disc with an optional cleaning cloth.
Wipe the disc in the direction of the arrows.

Do not use solvents such as benzine, thinner, commercially available cleaners or antistatic spray intended for analog discs.

This section is extracted from instruction manual.

Location and Function of Controls

Main Unit

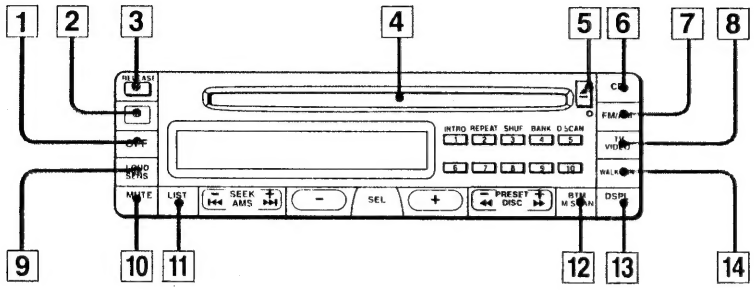

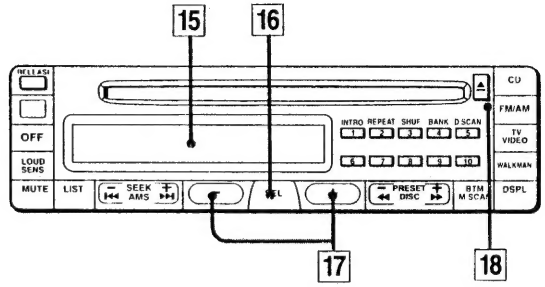

1 OFF button
Press to turn off the unit.

2 Receptor for the optional remote commander

3 RELEASE (front panel release) button

4 Disc insertion slot

5 ⏏ (eject) button

6 CD (disc play/CD changer select*) button

* When the optional CD Changer(s) is connected

7 FM/AM (radio on/band select) button

8 TV/VIDEO (television/video select) button

9 LOUD/SENS (loudness/sensitivity) button
Press for more than two seconds to reinforce the bass and treble especially when listening at a low volume level. To disengage the button, press it again for more than two seconds.

10 MUTE button
Press to mute the sound momentarily. Press again to restore the previous volume level. This button will also be canceled in the following cases:
— when the ⊕ or OFF button is pressed.
— when the ignition key of your car has been turned off to the OFF position for more than 8 seconds.

11 LIST (custom-file list) button

12 BTM/M.SCAN (best tuning memory/memory scan) button

13 DSPL (display change/time set) button

14 WALKMAN button
Press this button when you listen to audio equipment (WALKMAN etc.) connected to the WALKMAN jack of the main unit.

15 Display window

16 SEL (control mode select) button
Press to select the desired control mode: BAS (bass), TRE (treble), BAL (balance), FAD (fader) or VOL (volume).

Display window	Control mode	⊖ SEL ⊕ Press ⊖	Press ⊕
BAS	Bass control	For less bass	For more bass
TRE	Treble control	For less treble	For more treble
BAL	Balance control	To decrease the right-speakers' volume	To decrease the left-speakers' volume
FAD	Fader control	To decrease the rear-speakers' volume	To decrease the front-speakers' volume
VOL	Volume control	For less volume	For more volume

17 ⊖ ⊕ (volume/bass/treble/balance/fader control) buttons
The ⊖ and ⊕ buttons normally function as the volume control. To adjust other modes, press the ⊖ or ⊕ button within three seconds after selecting the desired mode with the SEL button. The control mode automatically goes back to the volume control mode in three seconds.

18 Reset button
Press this button when you use this unit for the first time, when you have changed the car battery, or when the buttons of this unit do not function.

Location and Function of Controls

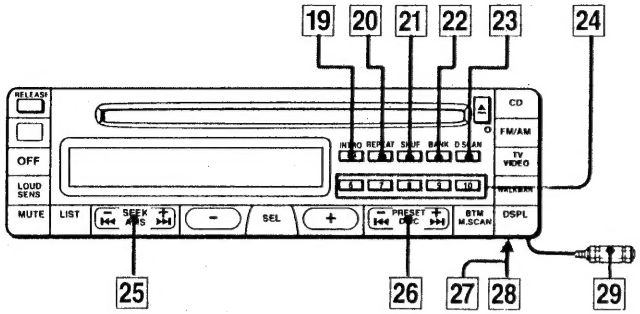

	During disc play	During radio/TV reception
19	**INTRO (track cue play) button**	**Preset number buttons**
20	**REPEAT (repeat play) button**	
21	**SHUF (shuffle play) button**	
22	**BANK button**	
23	**D. SCAN (disc scan) button**	
24	—	
25	**AMS (Automatic Music Sensor) button**	**SEEK (automatic tuning) button**
26	**DISC (manual search/disc search) button**	**PRESET (preset search/manual tuning) button**

The buttons 19 — 24 function as the direct disc selection buttons as well during disc play by a CD changer.

27 **FM DIVERSITY switch (Located on the bottom of the unit)**
See "FM DIVERSITY Switch" in the Installation/Connection manual.

28 **POWER SELECT switch (Located on the bottom of the unit)**
See "POWER SELECT Switch" in the Installation/Connection manual.

29 **WALKMAN jack**

Changing the illumination color

Press the INTRO 1 button while pressing the SEL button.

Muting the beep sound

Press the 6 button while pressing the SEL button. To obtain the beep sound again, press these buttons oce more.

Optional Remote Commander

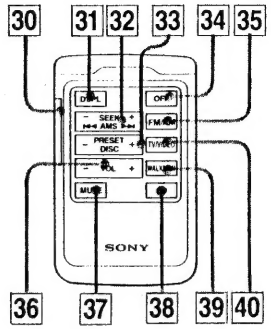

*Buttons of the same function as those on the main unit**

31 **DSPL (display change) button**
When the TV tuner unit (not supplied) is connected, this button functions as a switch for changing the displays on the TV screen. If the TV tuner is not connected, the button functions as same as the DSPL button on the main unit.

	During disc play	During radio reception	During TV reception
32	**AMS (Automatic Music Sensor) button**	**SEEK (auto-matic tuning) button**	

34 **OFF button**

35 **FM/AM (radio on/band select) button**

37 **MUTE button**

38 **CD (disc play/CD changer select) button**

39 **WALKMAN button**

40 **TV/VIDEO (television/video select) button**

* Some of these buttons function differently when the unit is in the simultaneous play mode. See page 50 for the details.

Different function buttons

30 **M.ILL (memory illumination) switch**
To illuminate the buttons on the remote commander, slide down this switch. The illumination goes off automatically after about 15 seconds.

	During disc play	During radio reception	During TV reception
33	**DISC (disc search) button**	**PRESET (preset search) button**	

You cannot do the manual search and manual tuning with the remote commander.
When the unit is in the simultaneous play mode, the PRESET button functions only as a preset search button.

36 **VOL (volume) button**
This button adjusts only the volume level.

When the POWER SELECT switch is set to OFF, the unit cannot be operated with the remote commander unless one of the CD, FM/AM, TV/VIDEO or WALKMAN buttons of the unit is pressed or a disc is inserted to activate the unit first.

Installing the Batteries

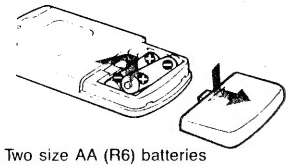

Two size AA (R6) batteries

Battery life

When the batteries become weak, you will not be able to operate the unit with the remote commander. Battery life is approx. six months although it depends on the way of use.

Notes on batteries

To avoid damage from battery leakage and corrosion:

—insert the batteries with the correct polarity.
—do not use an old battery with new one, or different types of batteries together.
—remove the batteries when you do not use the unit for a long time.
—do not charge the battery.

If any battery leakage occurs, replace the batteries with new ones after cleaning the battery compartment.

Installing the Optional Remote Commander

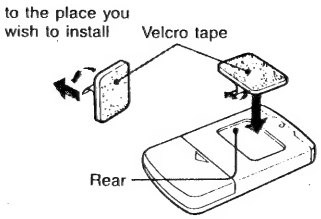

Install the remote commander with the velcro tape in a desired place.

Notes

- Do not install or leave the remote commander in a location near any heat sources, or in a place subject to direct sunlight (especially on the dashboard in summer etc.).
- When you park the car in direct sunlight, detach the remote commander and place it in a location not subject to direct sunlight such as the glove-box.
- Before installing the remote commander, be sure to confirm whether you can remote control the unit from the place you intend to install.
- Before attaching the velcro tape, clean the surface.

Detaching and Attaching the Front Panel

The front panel of this unit can be detached in order to prevent the unit from being stolen.

Detaching the Front Panel

Before detaching the front panel, be sure to press the OFF button first. Then press the RELEASE button to open up the front panel and detach the panel by pulling it towards you as illustrated.

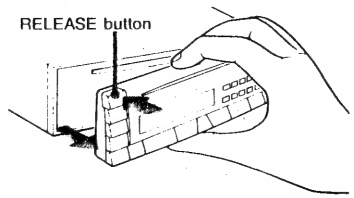

Be sure not to drop the panel when detaching it from the unit.

Attaching the Front Panel

Apply the right hand side of the front panel to the unit by attaching the part A of the front panel to the part B of the unit as illustrated and push until it clicks.

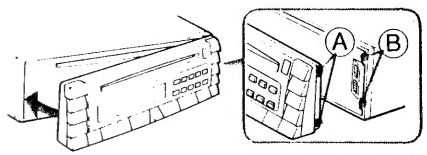

Caution alarm

If you turn your ignition key to the OFF position without removing the front panel, the caution alarm will be activated and a beep tone will be heard for a few seconds. (only when the POWER SELECT switch is set to the ON position)

Notes

- Make sure that the front panel is right way up when attaching it to the unit as it cannot be attached upside down.
- Do not press the front panel hard against the unit when attaching it to the unit. It can be easily attached by pressing it lightly against the unit.
- Never leave the detached front panel in your car if it is parked in direct sunlight as there could be a considerable rise in temperature inside the car.
- When you carry the front panel with you, put it in the supplied front panel case.
- Do not press hard or give excessive pressure to the display window of the front panel.

Installation

Precautions

- Choose the mounting location carefully so that the unit will not interfere with the normal driving functions of the driver.
- Avoid installing the unit where it would be subject to high temperatures, such as from direct sunlight or hot air from the heater, or where it would be subject to dust, dirt or excessive vibration.
- Use only the supplied mounting hardware for a safe and secure installation.
- Be sure to detach the front panel before you start installing the unit.

Mounting angle adjustment
Adjust the mounting angle to less than 20°.

Installation

Précautions

- Choisir soigneusement l'emplacement du montage, de manière que l'appareil ne gêne nullement les mouvements du conducteur.
- Eviter d'installer l'appareil là où il serait soumis à des températures élevées, comme en plein soleil ou à proximité d'une bouche d'air chaud, ni ou il serait soumis à de la poussière, saleté ou vibrations violentes.
- Pour garantir un montage sûr, n'utiliser que le matériel fourni.
- Veiller à détacher le panneau avant avant d'installer l'appareil.

Réglage de l'angle de montage
Ajuster l'inclinaison à un angle inférieur à 20°.

Mounting Example

Installation in the dashboard

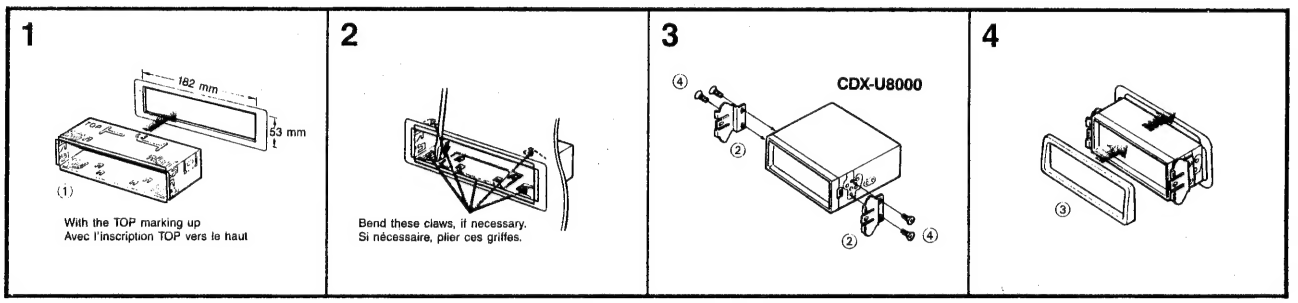

Exemple de montage

Encastrement dans le tableau de bord

To support the unit

Pour installer l'appareil

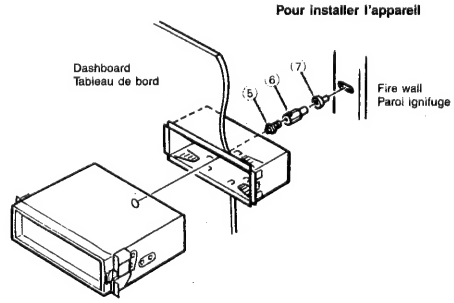

To Install the WALKMAN Jack

The WALKMAN jack can be installed on the dashboard etc. with supplied double-sided tape.

Notes
- Do not install the WALKMAN jack on the driver side of the dashboard.
- Place the WALKMAN cord where it would not interfere with normal driving function of the car.

Pour installer la prise WALKMAN

La prise WALKMAN peut être installée sur un tableau de bord etc. avec le ruban adhésif recto erso fourni.

Remarques
- Ne pas installer la prise WALKMAN du côté chauffeur sur le tableau de bord.
- Placer le cordon WALKMAN de manière qu'il ne gêne pas les mouvements du conducteur.

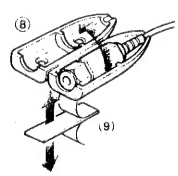

Connections Connexions

Caution

- This unit is designed for negative ground 12 V DC operation only.
- Before making connections, disconnect the ground terminal of the car battery to avoid short circuits.
- Connect the **red** power input lead only after all other leads are connected. And be sure to connect it to the positive 12 V power terminal which is energized when the ignition key is set to the accessory position.
- **Run all ground wires to a common ground point.**

Précautions

- Cet appareil est conçu pour fonctionner exclusivement sur courant continu de 12 volts avec masse négative.
- Avant de procéder aux connexions, débrancher la borne de mise à la masse de la batterie du véhicule, pour éviter tout court-circuit.
- Brancher le fil d'entrée d'alimentation **rouge** uniquement après que tous les autres fils ont été connectés. En outre, veiller à le raccorder à la borne d'alimentation positive de 12 V qui est énergétisée quand la clé de contact est commutée sur la position accessoire.
- **Rassembler tous les fils de mise à la masse en un point de masse commun.**

When the Unit is Used in a Car with No Accessory Position on the Ignition Key

— *POWER SELECT switch*

The illumination on the front panel is factory-set to be turned on even when the unit is not being played. However, this setting may cause some car battery wear **If the unit is used in a car with no accessory position on the ignition key.**
To avoid this battery wear when using the unit in such a car, **set the POWER SELECT switch located at the bottom of the unit to the OFF position, then press the reset button.** The illumination is reset to stay off while the unit is not being played.

Note

The caution alarm for the front panel is not activated when the POWER SELECT switch is set to the OFF position.

Quand l'appareil est utilisé dans une voiture dont la clé de contact ne possède pas de position accessoire

— *Interrupteur POWER SELECT*

L'éclairage du panneau avant est réglé en usine de façon à s'allumer même quand l'appareil ne fonctionne pas.
Cependant, ce réglage risque d'épuiser la batterie **si l'appareil est utilisé dans une voiture dont la clé de contact ne possède pas de position accessoire.**
Pour éviter ce désagrément, **commuter l'interrupteur POWER SELECT situé sur le fond de l'appareil sur OFF, puis appuyer sur la touche de réinitialisation.** L'éclairage est réinitialisé pour rester éteint quand l'appareil n'est pas utilisé.

Remarque

Quand l'interrupteur POWER SELECT est commuté sur OFF, l'avertisseur du panneau avant ne fonctionne pas.

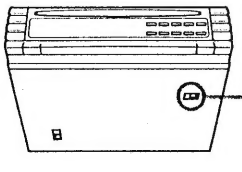

OFF ON

Use a ball-point pen or a similar object to select the position of the switch.
Utiliser un stylo à bille ou un objet similaire pour choisir la position de l'interrupteur.

When an FM Diversity Antenna is Used — *FM DIVERSITY switch*

This unit can be connected with diversity antennas. If you use this unit with the diversity antennas, **set the FM DIVERSITY switch located at the bottom of the unit to the ON position to activate the diversity system.**

Quand une antenne à rayonnement zénithal réduit est utilisée

— *Interrupteur FM DIVERSITY*

Cet appareil accepte le branchement d'antennes à rayonnement zénithal réduit. Pour pouvoir utiliser l'appareil avec ce type d'antenne, **commuter l'interrupteur FM DIVERSITY situé sur le socle de l'appareil sur ON, afin d'activer le système de diversité.**

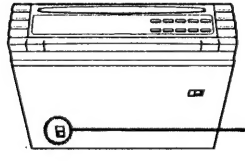

ON

OFF

Use a ball-point pen or a similar object to select the position of the switch.
Utiliser un stylo à bille ou un objet similaire pour choisir la position de l'interrupteur.

When you do not use the FM diversity antennas
If you wish to connect a conventional rod antenna, be sure to connect it to the antenna connector of the unit marked "MAIN", and set the FM DIVERSITY switch to the OFF position. Never connect the antenna to the connector marked "SUB", otherwise if the FM DIVERSITY switch is set to the ON position, the radio signals may not be received properly.

Note

The radio reception will be disturbed by noise if the connection of the antennas was not made properly or the FM DIVERSITY switch was not set correctly.

Quand on n'utilise pas d'antenne à rayonnement zénithal réduit
Pour brancher une antenne conventionnelle, veiller à raccorder celle-ci au connecteur d'antenne de l'appareil, marqué "MAIN" et commuter l'interrupteur FM DIVERSITY sur OFF. Ne jamais raccorder l'antenne au connecteur marqué "SUB", sinon, si l'interrupteur FM DIVERSITY est commuté sur ON, les signaux radiodiffusés seront mal reçus.

Remarque

La réception radio risque d'être parasitée si le raccordement des antennes a été mal réalisé ou si l'interrupteur FM DIVERSITY n'est pas correctement réglé.

Connection Diagram/Schéma de connexion

Example 1
Exemple 1

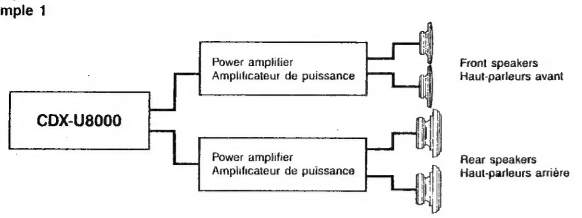

Example 2
Exemple 2

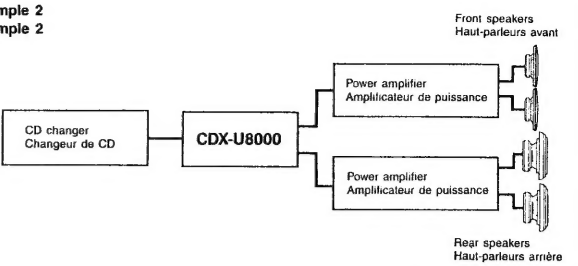

Example 3
Exemple 3

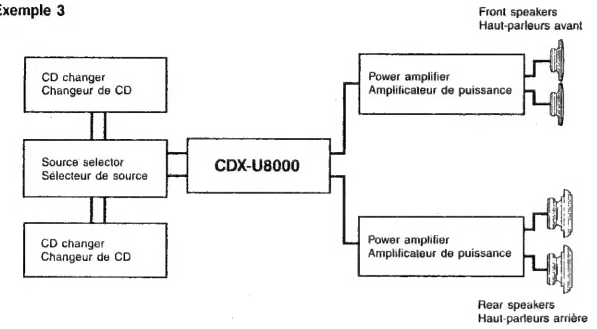

If you connect two or more CD changers, the source selector XA-U20 or XA-U40 (not supplied) is required.

Si deux changeurs de CD ou plus sont utilisés, un sélecteur de source XA-U20 ou XA-U40, (non fourni), est requis.

Example 4
Exemple 4

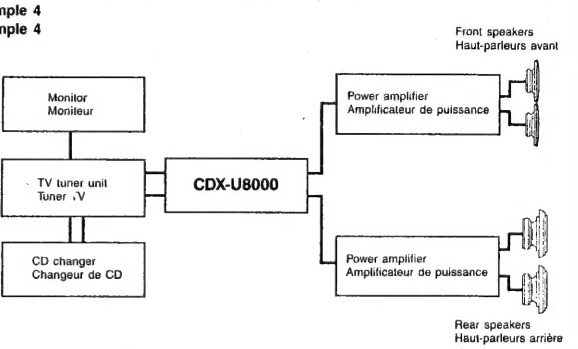

See the operating instructions of the TV tuner unit XT-U500V (not supplied) for details.

Se reporter au mode d'emploi du tuner TV XT-U500V (non fourni) pour plus de détails.

Connections of Example/Connexions de l'exemple

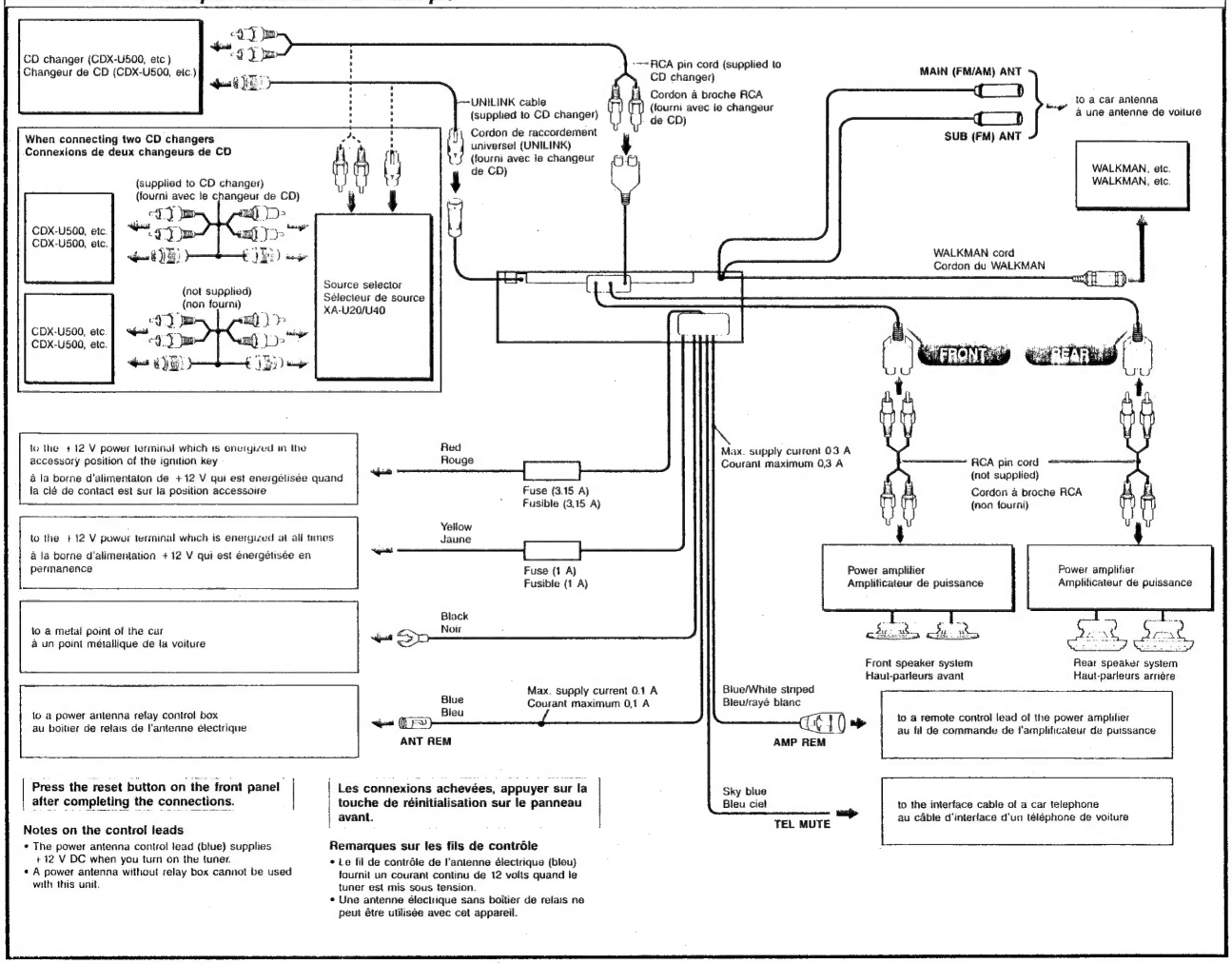

Press the reset button on the front panel after completing the connections.

Les connexions achevées, appuyer sur la touche de réinitialisation sur le panneau avant.

Notes on the control leads

- The power antenna control lead (blue) supplies + 12 V DC when you turn on the tuner.
- A power antenna without relay box cannot be used with this unit.

Remarques sur les fils de contrôle

- Le fil de contrôle de l'antenne électrique (bleu) fournit un courant continu de 12 volts quand le tuner est mis sous tension.
- Une antenne électrique sans boîtier de relais ne peut être utilisée avec cet appareil.

SECTION 2
IC PIN DESCRIPTION

2-1. Master Microcomputer IC504 (μPD75518GF-032-3B9)

Pin No.	Terminal	I/O	Description
1	CLOCK $\overline{\text{ON}}$/OFF	I	Clock function ON/OFF switching.
2	Vref	I	Reference voltage input pin of A/D conversion pin. 5 V is connected when POWER ON.
3	VDD	I	The power supply (5 V) of the micro computer is connected.
4	VDD		
5	MUTE	O	AUDIO MUTE output pin. Active when HIGH.
6	CD RST	O	CD servo IC resetting output pin. Starts it up approx. 300 msec. after the power supply of the servo has been turned ON with the CD PLAY pin.
7	CD DATA	O	SERIAL DATA output pin. Transmits the CD control command and data for the CD servo processor, and for signal processing.
8	CD LATCH	O	Signal output pin for CD DATA latching. The CD DATA is latched when low. Drops to LOW for more than 1 μsec.
9	CD CLK	O	Serial clock output pin for CD DATA reading. The servo IC reads the CD DATA at the rising edge of the CD CLK. (Maximum CLK frequency is 1 MHz.)
10	MD PL	O	Mechanism deck PLUNGER ON/OFF pin. Turns the plunger ON during the chucking and releasing of the disc. ● During chucking (12 cm) When E SW is ON during C SW OFF, PL turns OFF by PL ON F SW ON approx. 300 msec. after C SW turns OFF. (8 cm) When E SW is OFF during C SW OFF, PL turns OFF by PL ON F SW ON approx. 300 msec. after E SW turns ON. ● During eject PL turns on the moment the loading motor is reversed, and turns OFF approx. 300 msec. after F SW becomes OFF.
11	LM+	O	During disc loading, sets LM+ to HIGH, and LM– to LOW. During eject, sets LM– to HIGH, and LM+ to LOW.
12	LM–	O	
13	————	–	Not used.
14	D MUTE	O	Output which imposes muting at the digital DATA level in the signal processing IC. Used during access and sound muting, etc. Although the AUDIO MUTE (MUTE pin) will also be used at this time, D MUTE will be performed first when MUTE is ON, and performed later when MUTE is OFF.
15	$\overline{\text{APC}}$	O	CD PICK UP laser power ON/OFF control output.
16	————	–	Not used.

Pin No.	Terminal	I/O	Description
17	SUBQ	I	Q DATA input pin. Checks SUBQ when SCOR falls, and if it is HIGH (indicating that the data is correct), it will output SQCK and read the data.
18	———————	–	Not used.
19	SQCK	O	Clock output pin for reading the Q DATA. When SQCK is input to the signal processing IC, as the Q DATA will be input to the SUBQ pin, the data will be read at the SQCK rising edge. (Sets the period of SQCK to above 600 msec.)
20	———————	–	Not used.
21	HOT	I	Performs HIGH temperature detection to protect the CD PICK UP laser diode, and prevents CD play when the temperature is high. HIGH will be input during the high temperature condition.
22	$\overline{\text{F SW}}$	I	Mechanism deck sensor input pin. (Valid during MD ON condition.) Detects the completion of the DISC chucking operation. (LOW ACTIVE) MD PL turns OFF when F SW drops to LOW during loading.
23	SENS	I	Input pin which obtains various information from the servo IC. The output content changes according to the data transmitted to the IC. LIMIT SW condition, auto sequencer BUSY, etc. will be output.
24	$\overline{\text{ACC CHECK}}$	I	ACC line $\overline{\text{ON}}$/OFF detection.
25	Key microcomputer RST	O	Outputs HIGH when the KEY micro computer is reset during the starting up of the KEY micro computer V_{DD}, etc.
26	$\overline{\text{EMPHASIS}}$	O	Outputs LOW when a DISC which has been preemphasized is played back. (The Q DATA control bit coincides twice.)
27	———————	–	Not used.
28	———————	–	
29	E SW	I	Mechanism deck sensor (optical sensor) input pin. Used as the trigger at the beginning of the DISC chucking operation. Turns the MD PL ON approx. 300 msec. after the E SW becomes HIGH.
30	D SW	I	Mechanism deck sensor (optical sensor) input pin. 12 cm DISC and 8 cm DISC detections. Detects the completion of the 12 cm DISC EJECT. (LOW ACTIVE) After the 12 cm DISC has been ejected, detects loading start (turns ON at HIGH), when the DISC is inserted again with the C SW ON.

Pin No.	Terminal	I/O	Description
31	B SW	I	Detects that the center hole of the DISC passes by during mechanism deck sensor (optical sensor) loading and EJECT. (The optical sensor operates when the MD ON is HIGH. The rest is the same.)
32	$\overline{\text{G SW}}$	I	Mechanism deck sensor input pin. Displays the locked condition of the mechanism deck floating section. Sets to float lock condition when the DISC is ejected. The power supply of the servo IC has to be turned on because it is necessary to rotate the SLED motor inwards with the servo IC to turn the G SW ON. (CD PLAY pin ON)
33	VSS	I	Connected to GND.
34	TEST	I	
35	S MEMO $\overline{\text{ON}}$/OFF	I	
36	———————	–	Not used.
37	$\overline{\text{TEL MUTE}}$	I	When this pin becomes LOW, the TELEPHONE MUTE function operates, and lowers the volume by 20 dB.
38	CLK OUT	O	The DATA output from the master micro computer will be read at the rising edge when the DATA is transmitted from the communication serial CLOCK output master by the BUS, and when the data is received from the slave. CLK period is above 10 μsec. 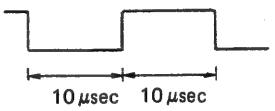
39	S GAIN	O	Although the CD mechanism deck for only one DISC can PLAY both 12 cm and 8 cm CDs without an adaptor, as the 8 cm weight less, it is necessary to switch the GAIN of the spindle servo. When the DISC is loaded, it determines if the DISC is 12 cm or 8 cm according to the conditions of each sensor. If the DISC is 8 cm, the deck sets this pin to LOW. (Condition of the sensors) 12 cm: B.D.E HIGH C.F LOW 8 cm: B.E HIGH C.D.F LOW
40	———————	–	Not used.
41	$\overline{\text{TEST}}$	I	When dropped to LOW, TEST mode 1 will be set.
42	ANT ON	O	ON/$\overline{\text{OFF}}$ control of the TUNER BLOCK power supply ANT REM.
43	ACC ON ILL	O	Turns ON/$\overline{\text{OFF}}$ by being linked to ACC line when the P/S SW is ON. Linked to POWER ON when the P/S SW is OFF.
44	POWER ON	O	ON/OFF control pin of the AMP REM, PRE AMP power supplies, PLL IC power supply, etc.

Pin No.	Terminal	I/O	Description
45	BEEP	O	Outputs 40 msec. of approx. 2 kHz square wave at one time during KEY acknowledge BEEP sounds and alarms, etc. Outputs 40 msec. of approx. 1 kHz square waveform at one time during memory input, etc.
46	————————	–	Not used.
47	NOSE OFF	I	Detects the removal of the attaching and removing type operation block. Becomes HIGH when the operation block has come OFF. Turns OFF the KEY 5 V, ACC ON ILL, POWER during NOSE OFF. (Also turns OFF TUNER +B when TUNER ON.)
48	C SW	I	CD mechanism deck sensor input. CSW is used for detection when a DISC is inserted, and when the 8 cm DISC has been ejected. (Chattering during ON and OFF is recognized.) Performs DISC loading when a DISC is inserted during B/U ON, ACC ON, and NOSE ON. (Interrupting pin)
49	SCOR	I	Timing input pin which reads the Q DATA (time data, etc.) from the signal processing IC. Imposes an interruption at falling, and reads the Q DATA. (Interrupting pin)
50	DATA IN	I	DATA input pin for communication by BUS.
51	DATA OUT	O	Serial DATA output pin for BUS communication. Outputs SYNC pattern when communication is not performed in the BUS active condition. (IDLE condition)
52	CLK IN	I	Timing input for BUS serial DATA output.
53	B/U CHECK	I	BATT line ON/$\overline{\text{OFF}}$ detection. (Interrupts when rising and falling.)
54	VSS	I	Connected to GND.
55	XT1	–	The sub CLOCK (32,768 kHz) for CLOCK is connected.
56	XT2	–	
57	VSS	I	Connected to GND.
58	X1	–	The system CLOCK (6.0 MHz) is connected.
59	X2	–	
60	————————	–	Not used.
61	$\overline{\text{SYSTEM RST}}$	O	Outputs when the master resets all systems connected to the BUS. (A different pin is used for the KEY micro computer of the attaching and removing type operation section = KEY micro computer RST.)

<table>
<tr><th>Pin No.</th><th>Terminal</th><th>I/O</th><th>Description</th></tr>
<tr><td>62</td><td>$\overline{\text{BUS ON}}$</td><td>O</td><td>When the BUS is in the ACTIVE condition, the BUS ON LINE in the BUS will become HIGH. This pin controls the $\overline{\text{ON}}$/OFF of this BUS ON 5 V.
• Sets to OFF during the SLEEP condition. (When communication is not performed during OFF, ACC OFF.)
• Sets to ON during the ACTIVE condition. (During communication or IDLE condition.)</td></tr>
<tr><td>63</td><td>$\overline{\text{KEY 5 V ON}}$</td><td>O</td><td>Turns the KEY 5 V ON during KEY micro computer VDD $\overline{\text{ON}}$/OFF, control, B/U ON, and NOSE ON.</td></tr>
<tr><td>64</td><td>————————</td><td>–</td><td rowspan="2">Not used.</td></tr>
<tr><td>65</td><td>————————</td><td>–</td></tr>
<tr><td>66</td><td>VOL CE</td><td>O</td><td>Outputs HIGH when the DATA is transmitted to the electronic VOL.</td></tr>
<tr><td>67</td><td>VOL CLK</td><td>O</td><td>Pin which outputs CLOCK which transmits to the VOL IC.</td></tr>
<tr><td>68</td><td>VOL DATA</td><td>O</td><td>Pin which outputs DATA which transmits to the VOL IC.</td></tr>
<tr><td>69</td><td>CD PLAY</td><td>O</td><td>Turns the servo IC power supply ON/$\overline{\text{OFF}}$.
Turns it ON during CD PLAY, the float lock operation.</td></tr>
<tr><td>70</td><td>MD ON</td><td>O</td><td>Power supply ON/$\overline{\text{OFF}}$ control output pin of the mechanism deck sensor, loading motor, and plunger.
When the mechanism deck is to be operated during the float lock condition, it can be operated merely with MD ON.</td></tr>
<tr><td>71</td><td>S2</td><td>O</td><td rowspan="2">AUDIO signal switching control output.
The four types of SCORE-CD and TUNER, AUDIO input from the NEW BUS slave, AUX input of WALKMAN, etc. of this unit can be set.
<table><tr><th>S1</th><th>S2</th><th>SOURCE</th></tr><tr><td>0</td><td>0</td><td>CD</td></tr><tr><td>1</td><td>0</td><td>AUX</td></tr><tr><td>0</td><td>1</td><td>SLAVE</td></tr><tr><td>1</td><td>1</td><td>TUNER</td></tr></table>1: High
0: Low</td></tr>
<tr><td>72</td><td>S1</td><td>O</td></tr>
<tr><td>73</td><td>VSS</td><td>I</td><td>Connected to GND.</td></tr>
<tr><td>74</td><td>P/S SW ON/$\overline{\text{OFF}}$</td><td>I</td><td>PS SW ON mode which sets the lighting of the FUNCTION KEY to ON or OFF when the ALL OFF condition has been set during ACC ON. (PLUS LCD display power supply when a CLOCK is present.)</td></tr>
<tr><td>75</td><td>$\overline{\text{WM IN}}$</td><td>I</td><td>WALKMAN input button valid/invalid switching.</td></tr>
</table>

Pin No.	Terminal	I/O	Description
76	GFS	I	Becomes HIGH when the frame sync (sync signal recorded in the DISC) is locked by PLL. When GFS stays LOW for more than 32 msec. during PLAY, it turns the D MUTE ON and the SLED servo OFF. When the GFS becomes HIGH once again and stays HIGH for more than 64 msec., it turns the D MUTE OFF and the SLED servo ON. When the GFS stays LOW for more than 5μsec., it determines that a malfunction has occurred, and performs stop and ejection.
77	FOK	I	As it becomes HIGH by the timing which can be focused during FOCUS search, it turns the FOCUS servo ON by detecting the timing (HIGH). (This process is not performed when the automatic sequence is used.) Becomes HIGH when focused during PLAY. If it remains LOW for more than 64 msec., it determines that the timing is out of FOCUS, and performs FOCUS search once again. It searches the point which is 1μsec. ahead of the "out of FOCUS" point, and performs PLAY.
78	$\overline{10}$/6 KEY	I	Pin which switches the preset KEY to 10-KEY or 6-KEY.
79	$\overline{\text{DIGITAL IN}}$	I	DIGITAL input function switching pin.
80	$\overline{\text{ALARM}}$	I	Performs switching of the alarm output function when the ACC KEY has been turned OFF without removing the nose piece.

2-2. Tuner Microcomputer IC601 (μPD75116GF-F40-3BE)

Pin No.	Terminal	I/O	Description
1	———————	–	Not used.
2	———————	–	
3	———————	–	(Connected to GND.)
4	———————	–	
5	———————	–	
6	———————	–	
7	RESET	–	Reset input pin.
8	X2	–	Connecting pins of the ceramics oscillator (4.19 MHz).
9	X1	–	
10	PLL-DI	I	Data input pin for the PLL-IC.
11	PLL-DO	O	Data output pin for the PLL-IC.
12	PLL-CLK	O	Clock output pin for the PLL-IC.
13	PLL-CE	O	Chip enable output pin for the PLL-IC.
14	———————	I	MODE select input pins.
15	———————	I	
16	———————	I	
17	———————	I	
18	———————	I	
19	———————	I	
20	———————	I	
21	———————	I	
22	———————	—	Not used.
23	———————	—	
24	———————	—	
25	———————	—	
26	VSS	–	GND pin.
27	———————	–	(Connected to GND.)

Pin No.	Terminal	I/O	Description
28	————	–	(Connected to GND.)
29	RDS-CLK	I	Serial interface CLOCK input pin. Connected to the CLOCK OUT pin. Sets the INT1 mode register (IM1) so that interruptions will be imposed by interrupting processing, and clock rising.
30	BUS-ON	I	Bus on input pin. Interrupting pin which detects bus ON/OFF. Recognizes the interrupting request flag (IREQ0) when the micro computer is in the operation mode. When the micro computer is in the STOP mode, this interruption is used to release the STOP mode. Before the STOP command is executed, it sets the interruption permission flag (IE0), interruption request flag (IE4), and INT0 edge detection mode register (IM0).
31	————	–	Not used. (Connected to VSS or VDD.)
32	ST IN	I	STEREO input pin. STEREO at level "L". This pin becomes "L" during forcible monaural output. The display DATA will always be transmitted at "0".
33	Vsm (FM)	I	FM S meter voltage detection pin. Uses the AD conversion function during BTM.
34	Vsm (AM)	I	AM S meter voltage detection pin.
35	————	–	Not used. (Connected to VSS or VDD.)
36	————	–	
37	ANT-ON	O	ANT-ON output pin. Outputs level "H" when the POWER of the TUNER is ON.
38	————	—	Not used.
39	Request	O	BUS request output pin. Pin for requesting communication. Requests at level "H".
40	LINK-OFF	O	BUS link OFF output pin. Links OFF at output level "H". Becomes "L" when the BUS is continuous. Remains at output level "L" if the link condition is set during the CLOCK STOP mode, and sets the input condition when the BACKUP turns OFF.
41	SI	I	BUS DATA input pin. Serial DATA input.
42	SO	O	BUS DATA output pin. Serial DATA output.
43	SCK	I	BUS CLOCK input pin. Serial CLOCK input for communication by the BUS. Outputs the CLOCK from IC504 during both transmission and receiving with the CLOCK sync 8 bits.

Pin No.	Terminal	I/O	Description
44	BUP	I	BACKUP detection input pin. Input pin for detecting BACKUP, and used for interrupting. When the micro computer is in the operation mode, it recognizes the BACKUP modification by the detections of both rising and falling edges of the interrupting request flag (IRQ4). As interruption is not performed, the interrupting permission flag (IE4) is prohibited. When the micro computer is in the STOP mode, this interruption is used to release the STOP mode.
45	———	–	Not used.
46	———	–	
47	———	–	
48	$\overline{\text{MONO}}$	O	Forcible monaural output pin. Output pin for switching the STEREO mode level "H" output, and the forcible monaural mode level output "L". When the AM band is set, the MS4 (mode selector pin) is valid only at "1". During TA interruption and alarm, it will output the forcible monaural level output "L" regardless of the mode set.
49	———	–	Not used.
50	———	–	
51	$\overline{\text{FM-FE-ON}}$	O	FM power supply control output pin. Outputs level "L" when FM.
52	$\overline{\text{AM-FE-ON}}$	O	AM power supply control output pin. Outputs level "L" when AM.
53	MUTE	O	MUTE output pin.
54	———	–	Not used.
55	———	–	
56	———	–	
57	NC	–	NC
58	VDD	–	Power supply pin.
59	SD	I/O	SD input pin. Determines the STOP levels of SEEK, AUTO-MEMORY, SCAN, etc. Outputs level "L" during AM receiving (during MUTE-OFF).
60	———	–	Not used.
61	EEP-SCK	O	EEP PROM CLOCK output pin.
62	EEP-SDA	I/O	EEP PROM DATA input/output pin.
63	———	–	Not used.
64	———	–	

2-3. Tuner Microcomputer IC603 (LC7216M)

Pin No.	Terminal	I/O	Description
1	XIN	I	Connecting pin of the crystal oscillator. (7.2MHz)
2	CE	—	Chip enable input pin.
3	DI	—	Data input pin.
4	CL	—	Clock input pin.
5	DO	—	Data output pin.
6	————	—	Not used.
7	————	—	
8	————	—	
9	————	—	Not used.
10	————	—	
11	$\overline{\text{DX/LO}}$	O	DX/LO switching control output pin. Output level "H" LOCAL.
12	SEEK	O	SEEK OUT output pin. Output level "L" when change the frequency.
13	LCTR	–	General–counter frequency measurement signal input pin.
14	HCTR	–	General–counter frequency measurement signal input pin.
15	AMIN	–	AM local oscillator signal input pin.
16	FMIN	–	FM local oscillator signal input pin.
17	VDD	–	Power supply pin. (4.5V–6.5V)
18	PD	–	Change pump output pin.
19	VSS	–	GND.
20	XOUT	O	Connecting pin of the crystal oscillator. (7.2MHz)

2-4. Key Display Microcomputer IC802 (μPD75008GB-679-3B4)

Pin No.	Terminal	I/O	Description
1	KI6	I	KEY SCAN input pin.
2	KI5	I	
3	KI4	I	
4	KI3	I	
5	KI2	I	
6	KI1	I	
7	KI0	I	
8	KO3	O	KEY SCAN output pin.
9	KO2	O	
10	KO1	O	
11	KO0	O	
12	NC	–	(Connected to VDD.)
13	NC	–	Not used. (Connected to VDD.)
14	NC	–	
15	NC	–	
16	NC	–	
17	VSS	–	VSS pin.
18	XT1	–	(Connected to GND.)
19	XT2	–	Not used.
20	$\overline{\text{RESET}}$	I	Resetting pin.
21	X1	I	System CLOCK oscillation connecting pin. Connected to 4.19 MHz.
22	X2	–	
23	LCD CLK	O	Pin which outputs CLOCK to the LCD DRIVER IC. (IC703: TC9240F)
24	LCD DATA	O	Pin which outputs DATA to the LCD DRIVER IC.
25	LCD CE	O	Pin which outputs CE to the LCD DRIVER IC. Used as a latch signal when transmitting the DATA.
26	LCD INH	O	Pin which outputs INH to the LCD DRIVER IC.
27	LINK OFF	O	Not used. (NC)
28	REQ	O	UNILINK BUS interface request pin. Outputs HIGH when requesting communication to the master micro computer (IC501).
29	DATA IN	I	Serial DATA input and communication timing detections input pin. (UNILINK BUS interface, DATA input pin)
30	DATA OUT	O	Serial DATA output pin. (UNILINK BUS interface, DATA output pin)

Pin No.	Terminal	I/O	Description
31	CLK IN	I	Clock input pin for serial communication. (UNILINK BUS interface, clock input pin)
32	BU CHECK	I	Power supply voltage detection pin.
33	————	–	(Connected to GND.)
34	NC	–	(Connected to VDD.)
35	$\overline{\text{TV CONT}}$	I	Initial setting pin for the ON/OFF of the hideaway TV tuner control function. TV control will be ON at LOW input, and OFF at HIGH input.
36	$\overline{\text{BUS ON}}$	I	UNILINK BUS interface, BUS ON pin. BUS communication is possible at LOW input.
37	SIRCS	I	Input pin of the infrared remote control.
38	NC	–	(Connected to VDD.)
39	VDD	–	VDD pin.
40	LCD ON	O	Power supply control pin of the LCD back-light and LCD DRIVER IC.
41	ACC-ON ILL	O	Output pin for lighting the function key buttons, etc. HIGH output at ACC ON, and LOW output at ACC OFF. (When the power select SW is ON.) (Not used.)
42	P-ON ILL	O	Output pin for lighting buttons other than the function keys. HIGH output at power ON, and LOW output at OFF.
43	COLOR	O	Output pin for switching lighting colors. Green at HIGH output, output, and amber at LOW output.

SECTION 3
MECHANICAL ADJUSTMENTS

Turntable Height Adjustment

Loosen the fixing screws and adjust the height to the specification illustrated.

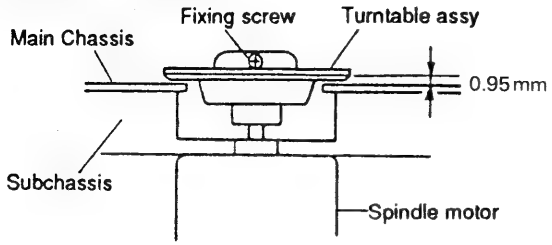

Lock Gears (A and B) Installing Adjustment

Since installing lock gears A and B is the same, only lock gear B is described below.

1. Rotate the gear near the motor with your fingers to move the optical section toward the external circumference.
2. Continue to rotate the gear until the lock gear is disconnected from the notch of the chassis and stops.
3. Fix the lock gear so that the holes of the lock lever and the lock gear and the spindle are roughly aligned.

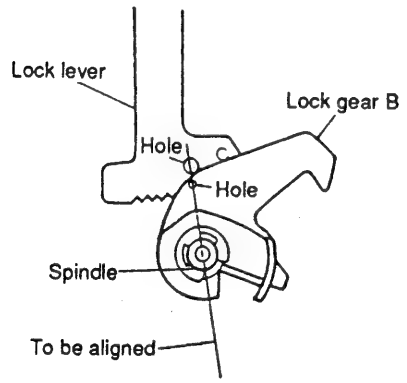

Lock Gear C installing Position Adjustment

1. Rotate the gear near the motor and move the optical section toward the external circumference.
2. Continue to rotate the gear until the lock gear is disconnected from the notch of the chassis and stops.
3. Fix lock gear C so that the spindle, the lock gear C fixing axis and the center of the lock gear C projection are roughly aligned.

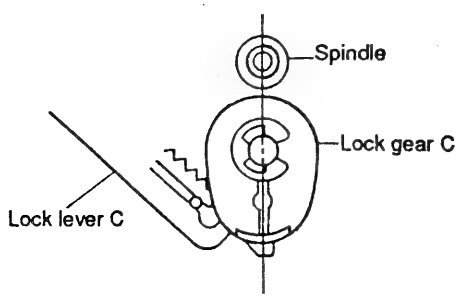

SECTION 4
ELECTRICAL ADJUSTMENTS

FM S Meter Adjustment

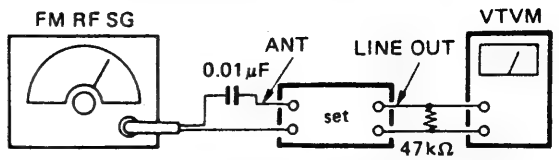

Carrier frequency:	97.9MHz (US, Canadian models) 98.0MHz (E model)
Output level:	1mV (More than 35dB)
Mode:	FM
Modulation:	Pilot signal 19kHz, 7.5kHz deviation (10%)

Procedure:

1. Tune-up at US, Canadian models: 97.9MHz, E model: 98.0MHz.
2. Adjust RV603 so that reading on VTVM is 2.0 ± 0.1V.

FM Carrier Leak Adjustment

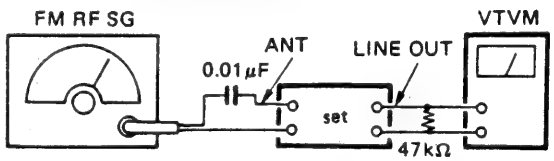

Carrier frequency:	97.9MHz (US, Canadian models) 98.0MHz (E model)
Output level:	1mV (More than 35dB)
Mode:	FM
Modulation:	Pilot signal 19kHz, 7.5kHz deviation (10%)

Procedure:

1. Tune-up at US, Canadian models: 97.9MHz, E model: 98.0MHz.
2. Adjust RV601 so that reading on VTVM is minimum level.

FM stereo separation adjustment

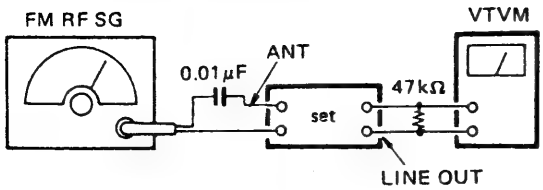

Carrier frequency: 97.9MHz (US, Canadian models)
98.0MHz (E model)
Output level: 1mV (More than 35dB)
Mode: FM
Modualtion: Main channel: 1kHz, 33.75kHz deviation (45%)
Pilot signal: 19kHz, 7.5kHz deviation (10%)
Subchannel: 1kHz, 33.75kHz deviation (45%)

Procedure:

FM Stereo SSG Output channel	VTVM connection	VTVM reading (dB)
L-CH	L-CH	(A)
R-CH	L-CH	Adjust RV602 so that the VTVM reading is minimum. (B)
R-CH	R-CH	(C)
L-CH	R-CH	Adjust RV602 so that the VTVM reading is minimum. (D)

Note: The separation values in the two channels should be identical.
(A) – (B) = (C) – (D)

PLL free-run frequency adjustment

1. Remove the soldering bridge (EFM) from the RF board.
2. Connect the frequency counter to test point (PLCK).
3. Turn the power on and adjust RV5 so that frequency counter reading satisfies the specification.

Adjustable limits: 4.3118 to 4.3318MHz

Adjustment point: RF board

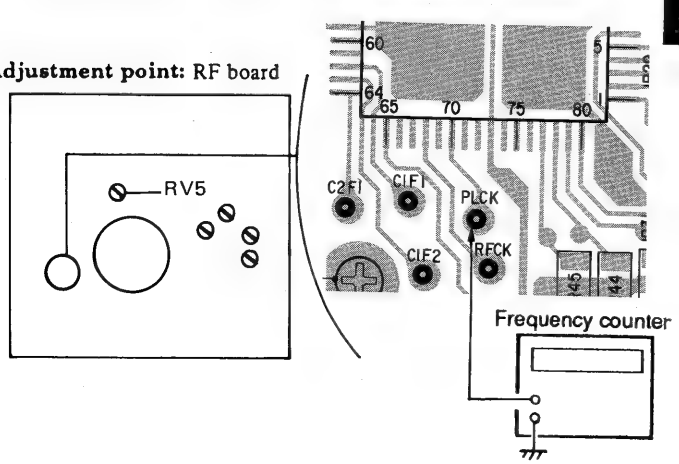

Focus offset adjustment

Adjustment:

1. Connect the oscilloscope to test point RF on the RF board.
2. Load a disc and set mode to PLAY.
3. Adjust RV2 so that the waveform on the oscilloscope (eye pattern) is maximum with good shape. "Well-shaped eye pattern" means that the mark " ◇ " is clearly distinguished at the center of the waveform.

Adjustment point: RF board

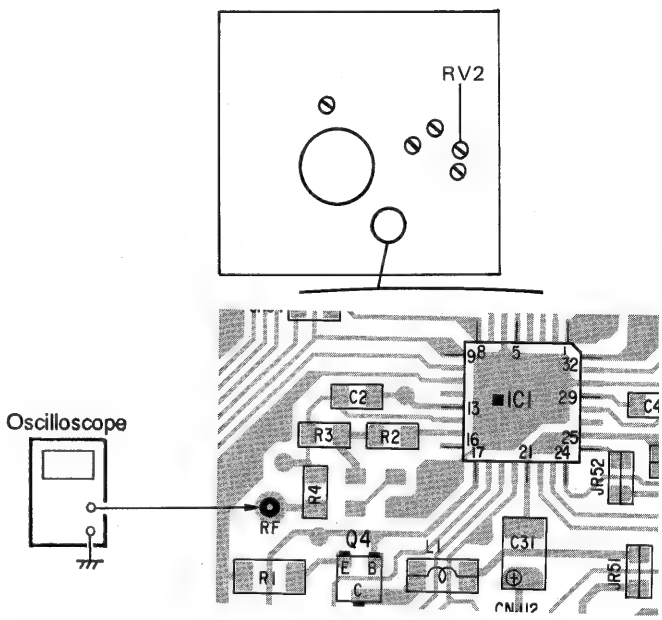

Volt/div: 200mV
Time/div: 0.5μsec

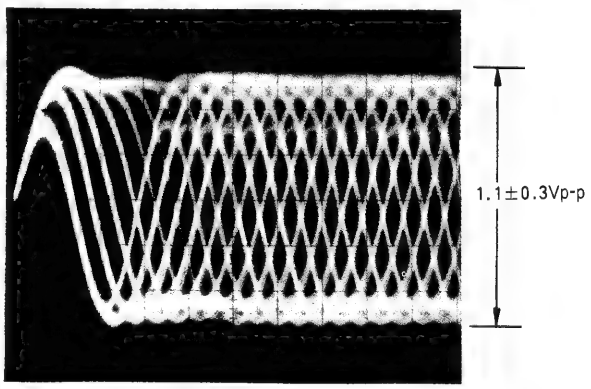

Tracking offset adjustment

Adjustment:

1. Connect the oscilloscope to test point TE on the MD board.
2. Load a disc and set mode to PLAY.
3. Press button ⏮ or ⏭ (◀◀ or ▶▶) and observe the traverse waveform.
4. Adjust RV1 so that the waveform is symmetric when cenetered at the level to be accessed.

Adjustment point: RF board

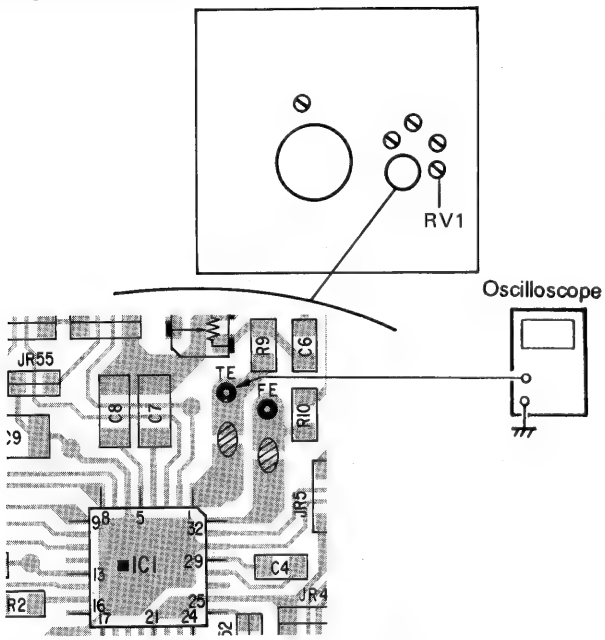

* Traverse waveform: Tracking error waveform which is observed when the track is traversed.

Volt/div: 0.5V
Time/div: 2msec
Center 0V

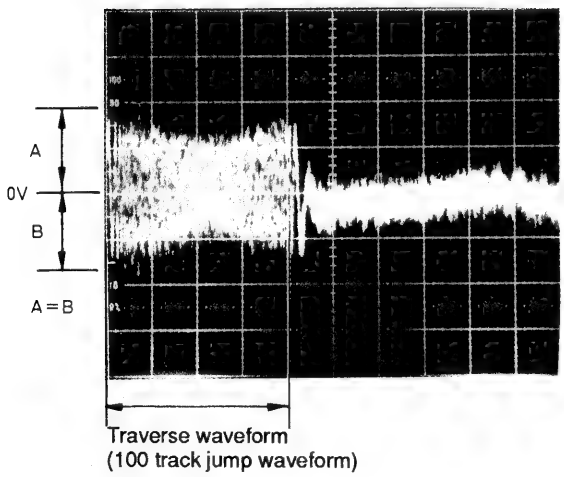

Traverse waveform
(100 track jump waveform)

Tracking gain adjustment (Coarse adjustment)

This adjustment is not required unless the following parts are replaced:

- Optical block
- BF503

Before starting this adjustment, complete the focus offset adjustment and the tracking off set adjustment.

Adjustment:

1. Connect the oscilloscope to test point TE on the main board.
2. Load a disc and set mode to PLAY.
3. Turning RV4 clockwise, from the leftmost position, observe the waveform on the oscilloscope.
   Fix RV4 at the position where the waveform is become stable.

Adjustment point: RF board

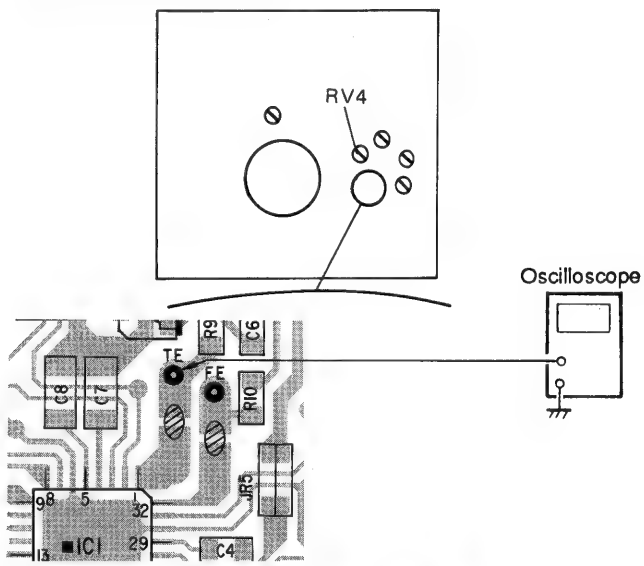

Volt/div: 0.5V
Tile/div: 2msec

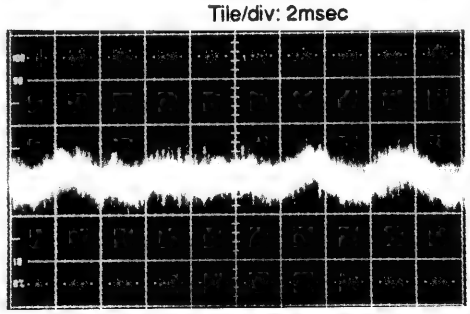

Fluctuating waveform

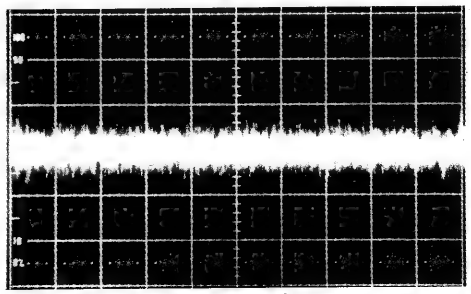

Stable waveform

- If the gain is too low

  When music is selected by pressing button ⏮ or ⏭ , the tracking jump waveform is not focused completely and the music selection is delayed. (Break function does not work wall because its gain is too low.)

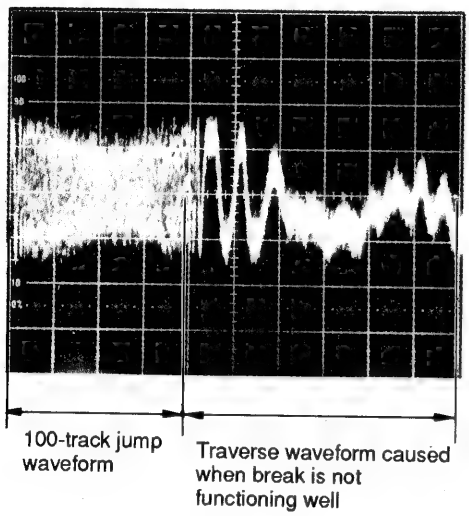

- If the gain is too high

  Noise due to scratches and dust is heard and the operation becomes unstable.

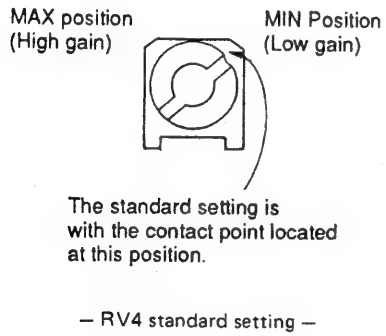

Focus gain adjustment (Coarse adjustment)

This adjustment is not required unless the following parts are replaced:

- Optical block
- RV3

Adjustment

1. Set RV3 to the standard position.
2. Check whether operation noise (white noise type) caused by the double-axis device (lens section of the optical block) is abnormally loud.
   If the operation noise is too loud, turn RV3 slightly counterclockwise.

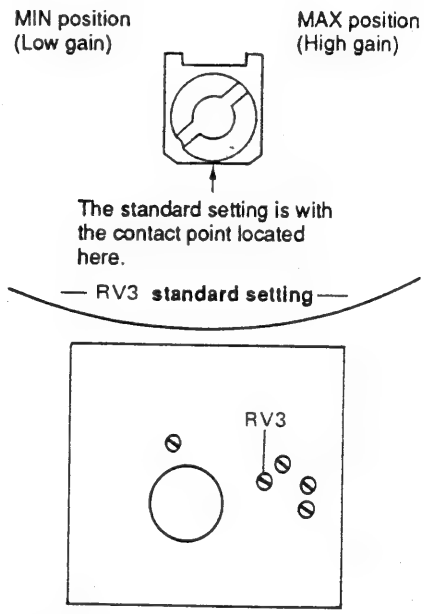

- If the gain is too low:
  Focus does not function and no music is selected.
- If the gain is too high:
  Noise caused by scratches and dust is heard and the operation becomes unstable.

SECTION 5
DIAGRAMS

5-1. BLOCK DIAGRAM

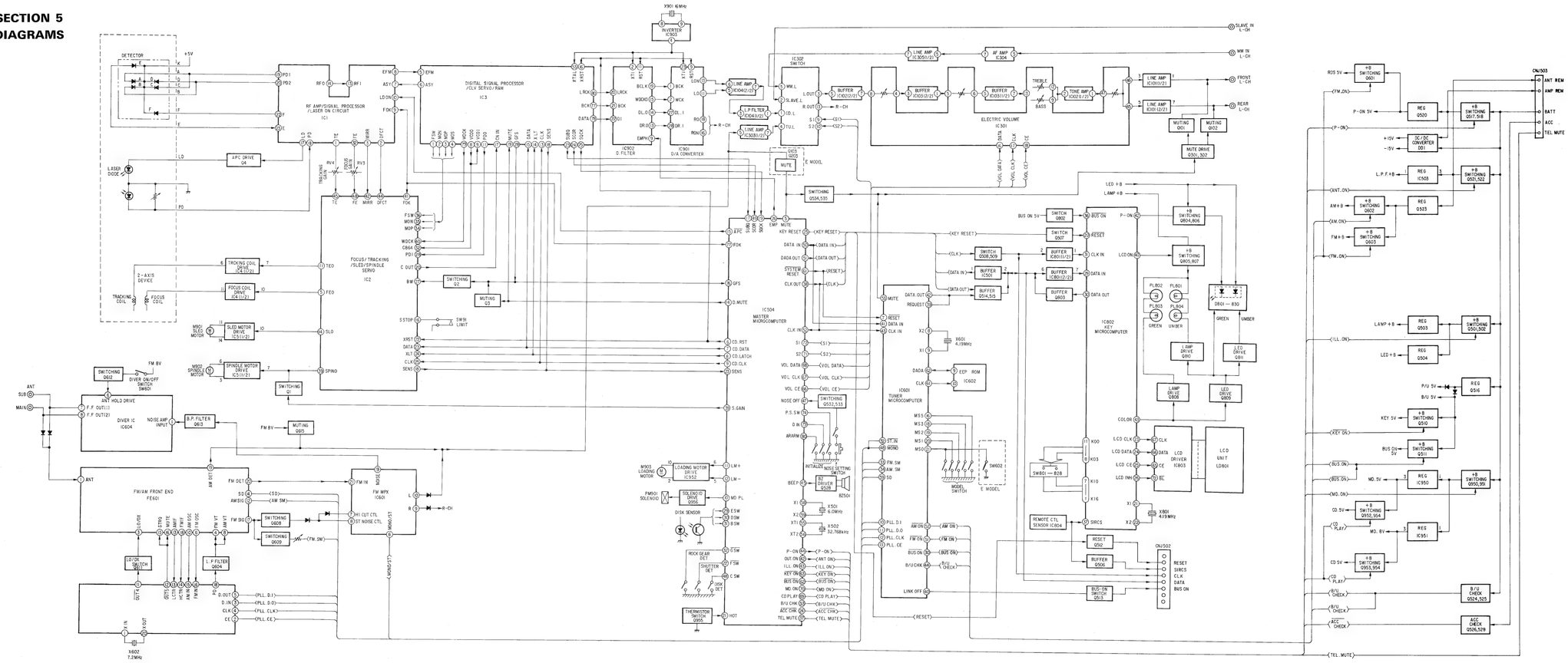

Note: (Main SECTION)

- All capacitors are in μF unless otherwise noted. pF: μμF
  50WV or less are not indicated except for electrolytics and tantalums.
- All resistors are in Ω and 1/16W or less unless otherwise specified.
- △ : internal component.
- ——— : B+ lines.
- Power voltage is dc 14.4V dc and fed with regulated dc power supply from external power voltage jack.
- Voltage and waveforms are dc with respect to ground under no signal conditions.
  no mark : FM
  ( ) : CD PLAY
  〈 〉 : AM
- Voltages are taken with a VOM. (input impedance 10 MΩ) Voltage variations may be noted due to normal production tolerances.
- Waveforms are taken with a oscilloscope. Voltage variations may be noted due to normal production tolerances.
- Circled numbers refer to waveforms.
- Signal path.
  ⇨ : FM
  ⇨ : CD
  ⇨ : AUX
- Abbreviation
  CND: Canadian model

Note: (MD SECTION)

- All capacitors are in μF unless otherwise noted. pF: μμF
  50WV or less are not indicated except for electrolytics and tantalums.
- All resistors are in Ω and 1/16W or less unless otherwise specified.
- ——— : B+ lines.
- Power voltage is dc 14.4V dc and fed with regulated dc power supply from battery accessory terminals.
- Voltage and waveforms are dc with respect to ground under no signal conditions.
  no mark : CD PLAY
- Circled numbers refer to waveforms.
- Signal path.
  ⇨ : CD

• SEMICONDUCTOR LOCATION (MD Section)

Ref. No.	Location
D80	F-1
D81	E-3
D82	C-1
IC1	F-11
IC2	D-11
IC3	E-7
IC4	B-11
IC5	B-10
Q1	E-10
Q2	C-7
Q3	C-7
Q4	G-10
Q90	F-5
Q91	F-4
Q92	D-4

• SEMICONDUCTOR LOCATION (MAIN Section)

Ref. No.	Location	Ref. No.	Location	Ref. No.	Location
D101	B-6	HIC601	E-24	Q509	D-8
D102	C-22			Q510	G-9
D103	J-24	IC101	C-6	Q511	G-9
D202	C-20	IC102	E-21	Q512	C-9
D203	J-24	IC103	D-21	Q513	E-8
D303	J-25	IC104	I-18	Q514	G-8
D501	B-16	IC201	C-7	Q515	D-9
D502	B-16	IC202	E-21	Q516	C-11
D503	B-18	IC203	D-21	Q517	B-7
D504	B-18	IC204	J-18	Q518	B-19
D505	C-19	IC301	D-6	Q520	A-18
D506	G-8	IC302	F-6	Q521	B-2
D507	D-8	IC303	F-22	Q522	B-24
D508	F-20	IC304	J-4	Q523	C-4
D509	C-11	IC305	J-22	Q524	B-18
D510	C-17	IC501	F-7	Q525	B-19
D512	B-18	IC502	C-18	Q526	C-11
D513	D-24	IC503	D-25	Q528	I-20
D514	B-26	IC504	D-10	Q529	C-11
D515	B-18	IC801	H-5	Q530	G-7
D516	A-16	IC802	I-5	Q531	G-7
D517	B-26	IC803	I-25	Q532	I-21
D518	F-5	IC804	C-25	Q533	I-21
D519	E-17	IC901	I-9	Q534	C-5
D520	C-8	IC902	J-11	Q535	C-4
D530	J-19	IC903	G-16	Q602	E-25
D531	J-19	IC950	A-19	Q603	E-25
D532	J-19	IC951	A-18	Q604	G-26
D533	J-8	IC952	C-15	Q608	G-24
D534	C-17			Q609	G-3
D540	I-19	Q101	B-6	Q611	D-25
D541	C-17	Q102	A-7	Q612	D-25
D542	D-3	Q103	F-5	Q613	C-24
D601	G-22	Q201	B-7	Q614	C-2
D602	G-23	Q202	A-7	Q615	E-2
D603	G-25	Q203	F-5	Q950	B-12
D604	G-25	Q301	C-6	Q951	C-11
D606	G-24	Q302	C-5	Q952	G-12
D607	C-25	Q501	B-17	Q953	F-13
D608	D-26	Q502	B-10	Q954	G-15
D609	D-26	Q503	B-10	Q956	D-13
D610	H-3	Q504	B-11		
D950	F-15	Q506	F-8		
D951	D-15	Q507	H-9		
D952	C-15	Q508	E-8		

5-2. PRINTED WIRING BOARDS (MD Section)

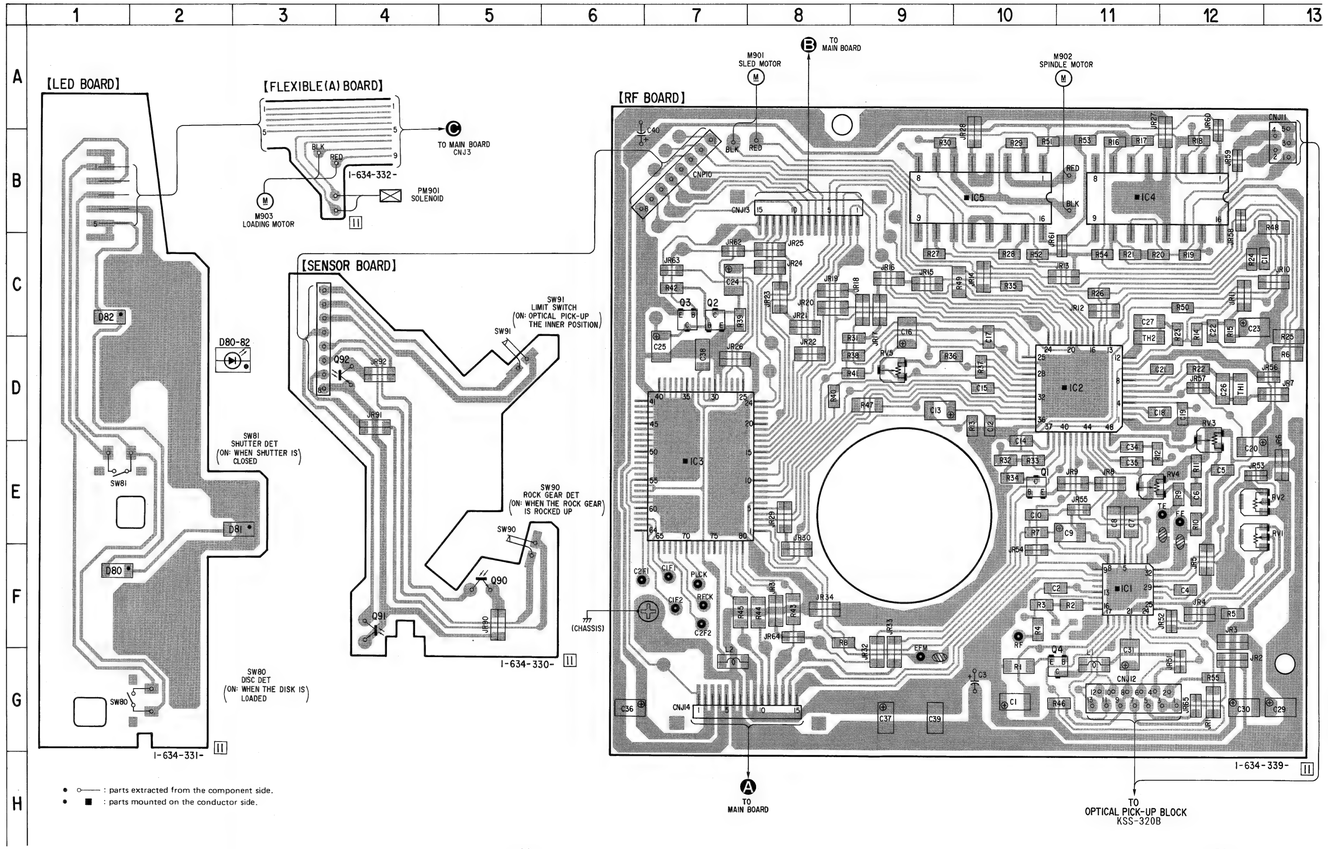

5-3. SCHEAMTIC DIAGRAM (MD Section)

- See page 53 for IC BLOCK DIAGRAMS.
- See page 51 for WAVEFORMS.

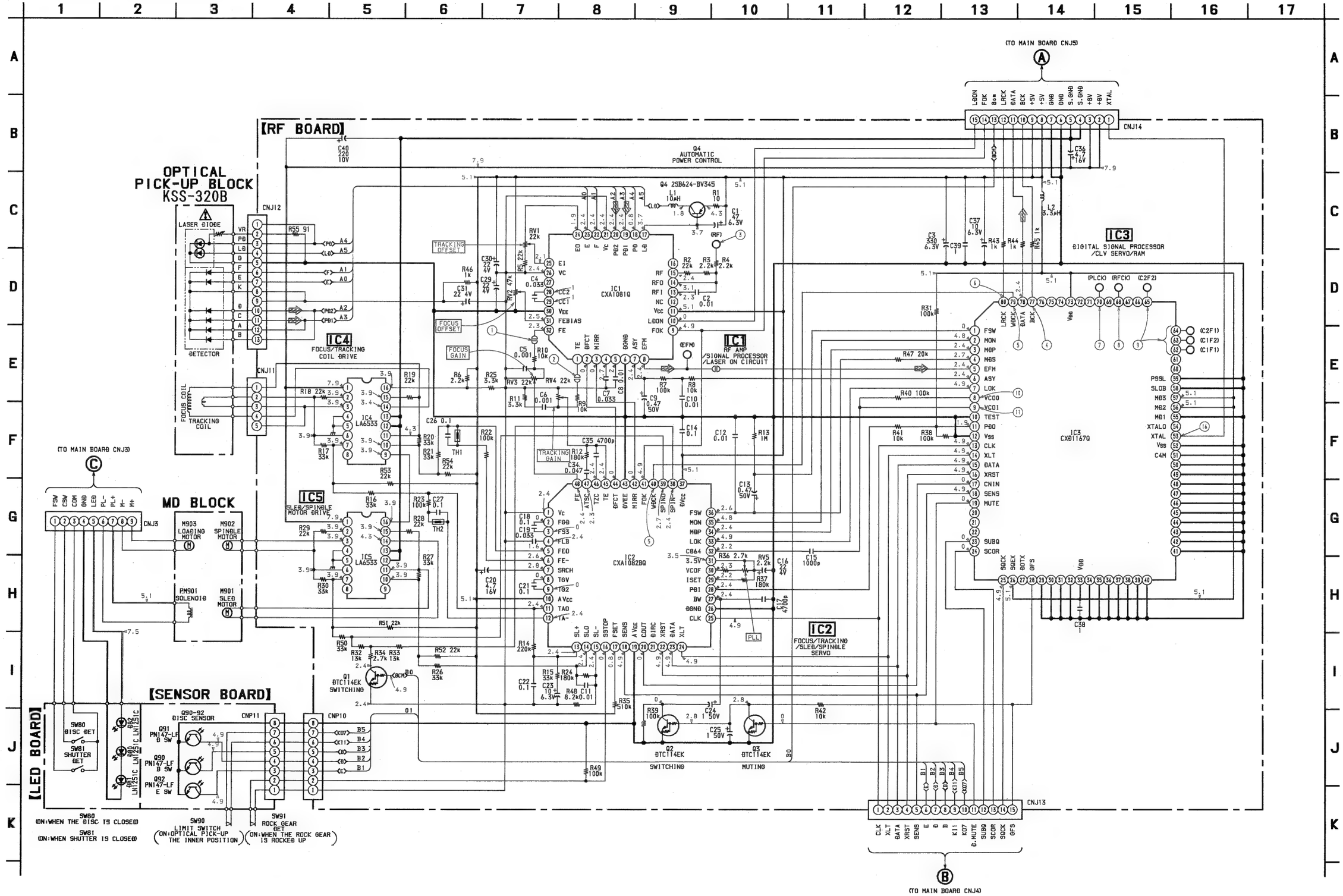

5–4. SEMICONDUCTOR LEAD LAYOUTS

LB1645N

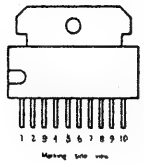

LC7537AN

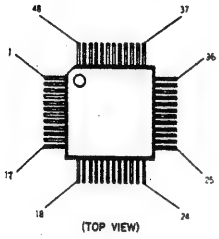

μPD75008GB-670-3B4

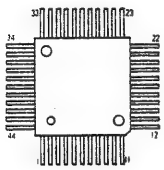

S-8054HN-CB

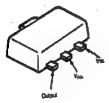

TC9240
μPD75116GF-F14-3BE
μPD75518GF-032-3B9

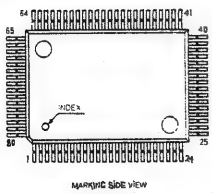

SM5840CS

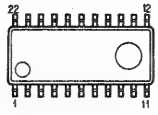

RC78M05FA
RC7808FA

DTA124EK
DTC114EK
DTC124EK
DTC143TK
DTC144EK
DTC314TKH04
2SA1162

DTB114EK

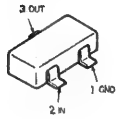

2SB1115A
2SD1664-QR

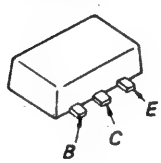

CL-155Y/PG-CD

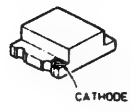

DTZ5.1C
1SS355

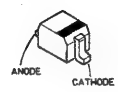

MA152WK

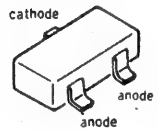

RD3.9M-B2
RD5.6M-B2
RD11M-B2

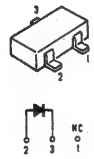

RD5.6ES-B2
RD6.2ES-L3
RD7.5ES-B1
RD9.1ES-B2
RD11ES-B2
RD16ES-B3
1SS119
11ES2

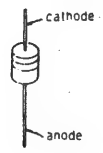

1SS226

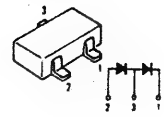

1S2836

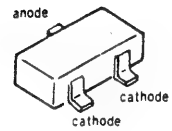

5–5. PRINTED WIRING BOARDS (Main Section)

• See page 37 for semiconductor lead lauouts. • See page 32 for semiconductor location.

MAIN BOARD (COMPONENT SIDE)

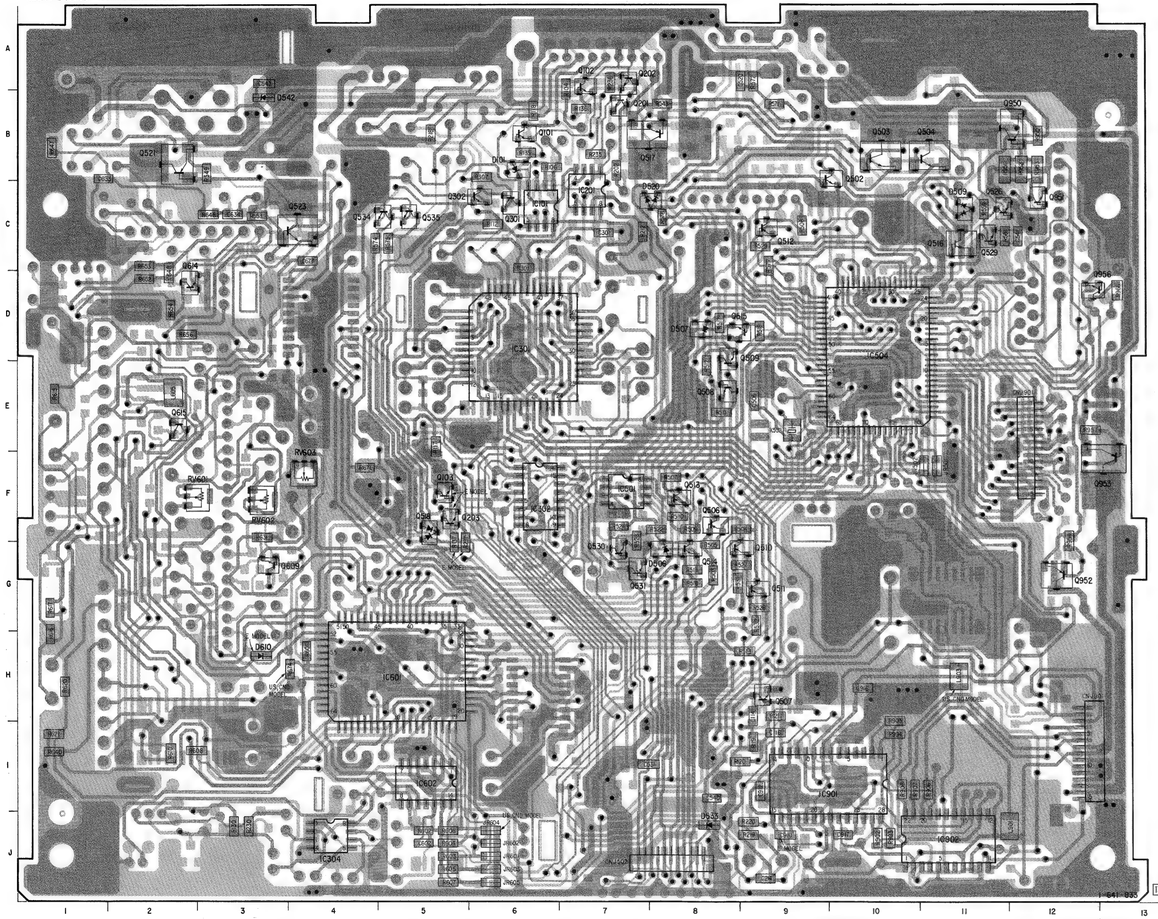

MAIN BOARD (CONDUCTOR SIDE)

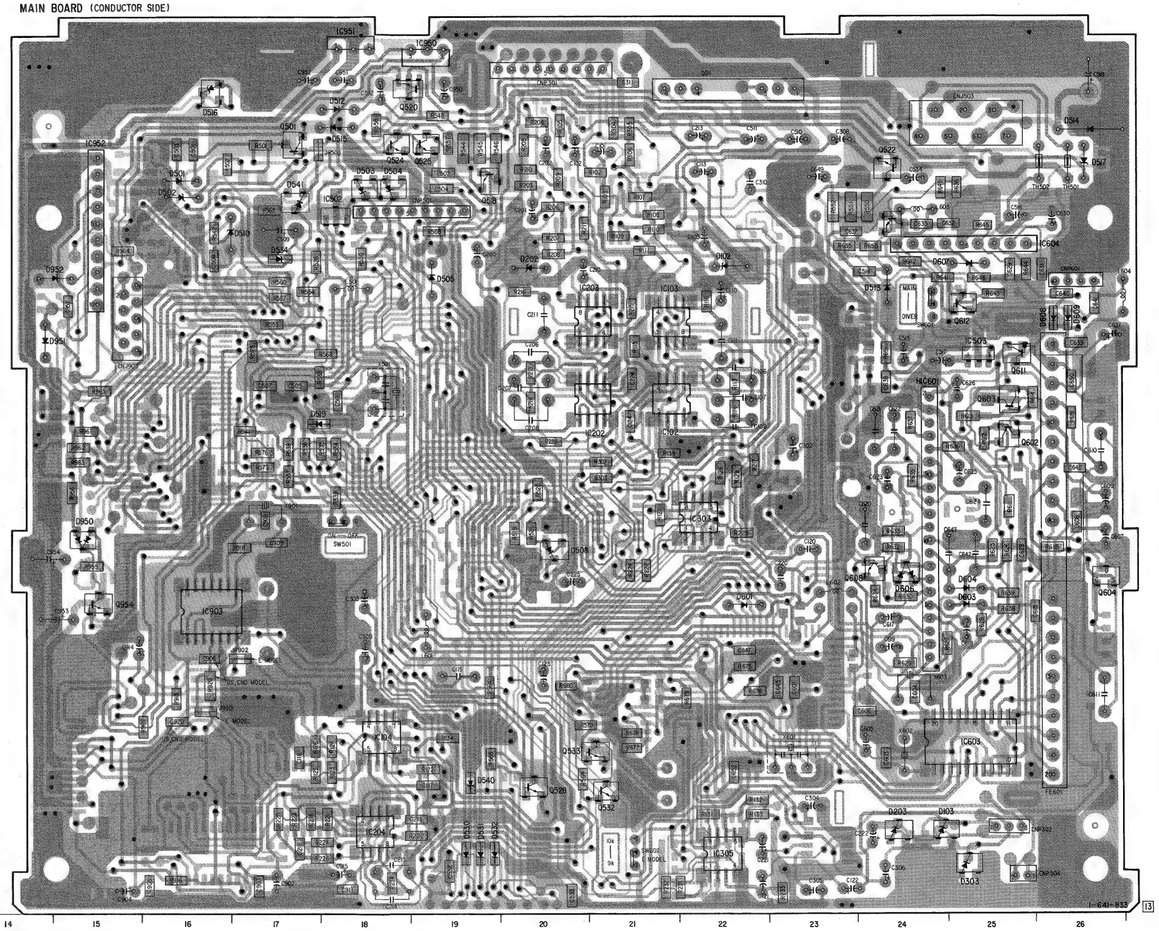

Note:

- ○—— : parts extracted from the component side.
- ● : Through hole.
- ▒▒ : Pattern on the side which is seen.
- ▒▒ : Pattern of the rear side.
- Abbreviation
  CND: Canadian model

5-6. SCHEMATIC DIAGRAM (Main Section) • See page 31 for note. • See page 53 for IC BLOCK DIAGRAMS. • See page 51 for WAVEFORMS.

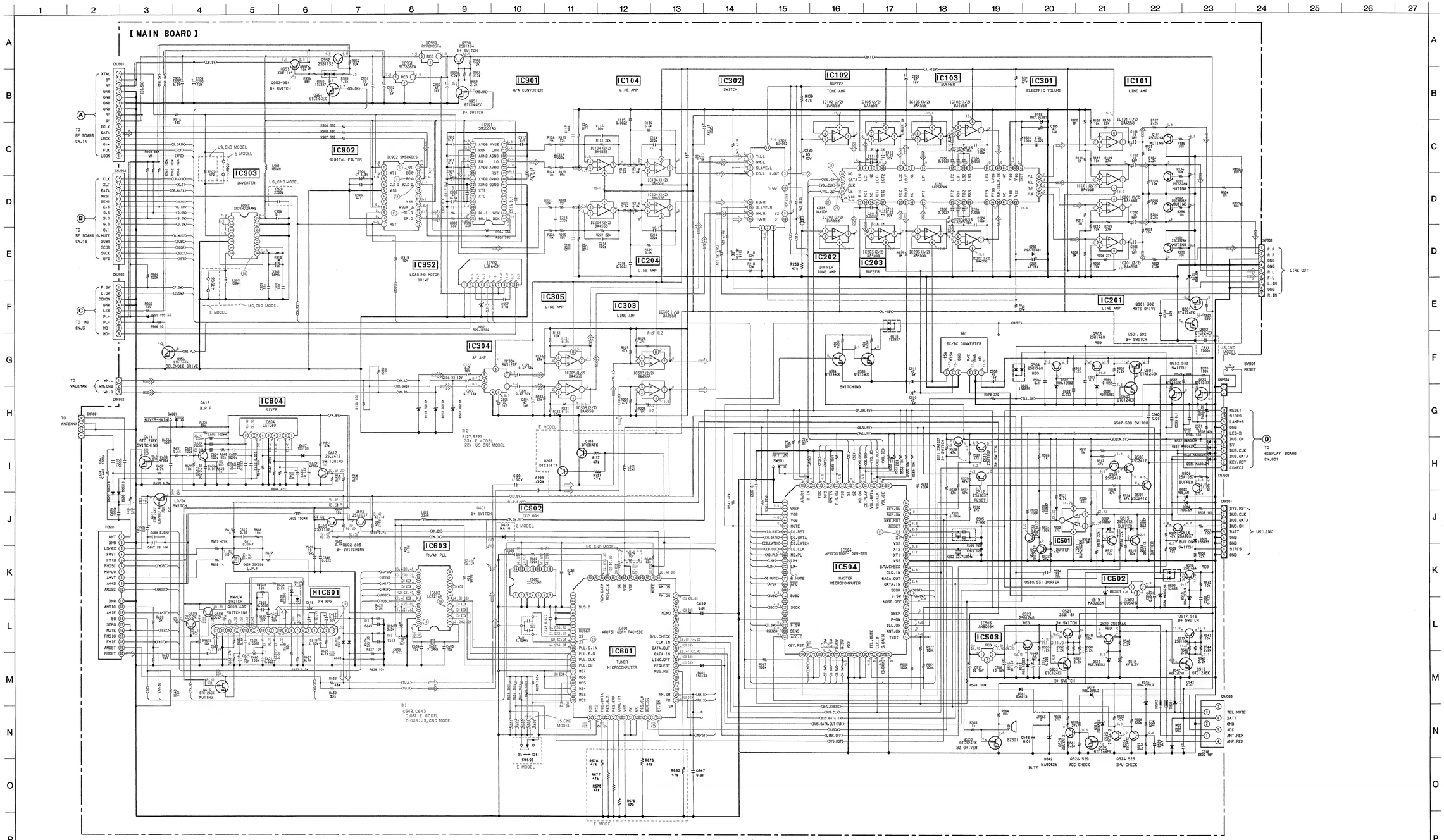

5-7. SCHEAMTIC DIAGRAM (Display Section) • See page 31 for note. • See page 53 for IC BLOCK DIAGRAMS. • See page 51 for WAVEFORMS.

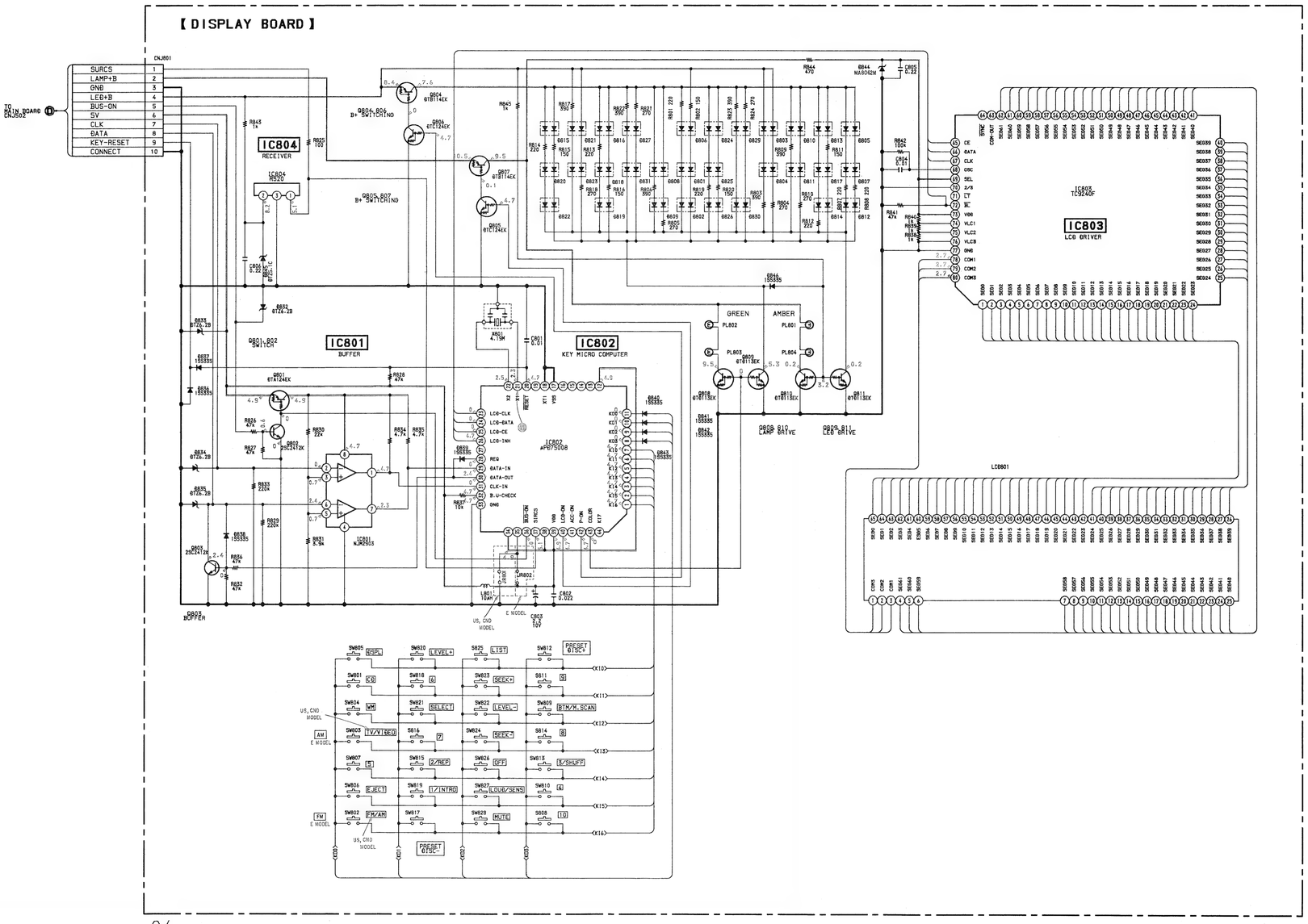

06

5–8. PRINTED WIRING BOARDS (Display Section)

● See page 37 for semiconductor lead layouts.

DISPLAY BOARD (CONDUCTOR SIDE)

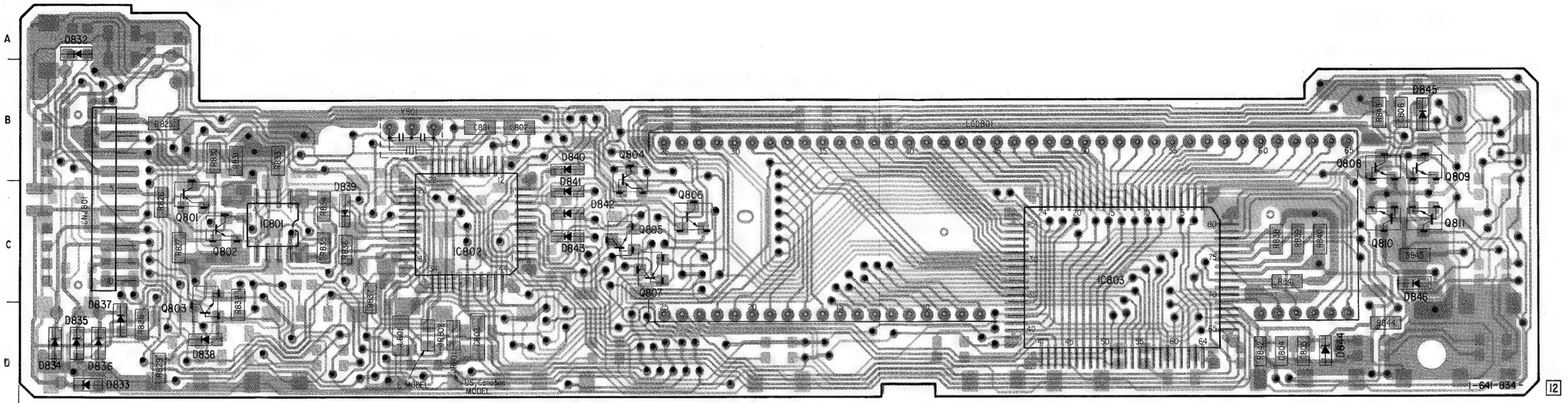

5-9. WAVEFORMS

①

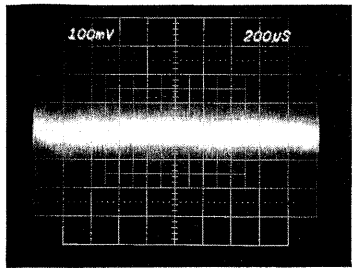

②

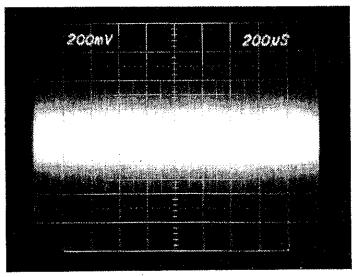

③

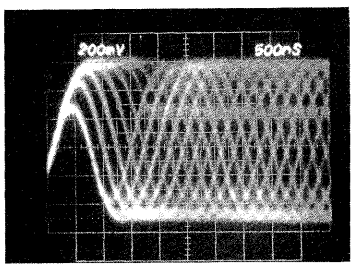

④

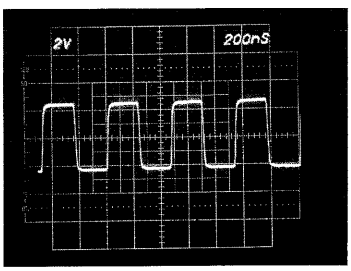

⑤

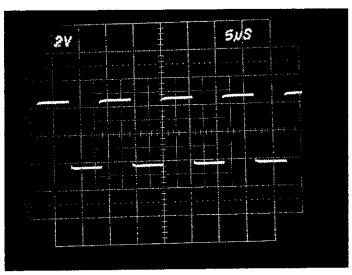

⑥

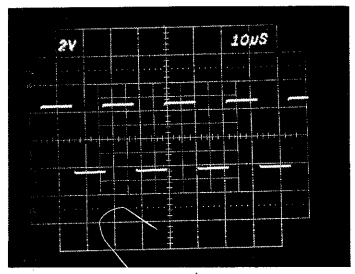

⑦

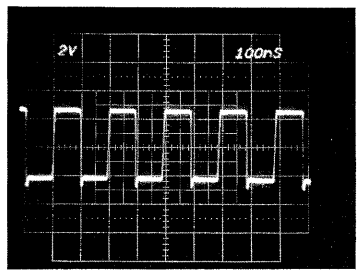

⑧

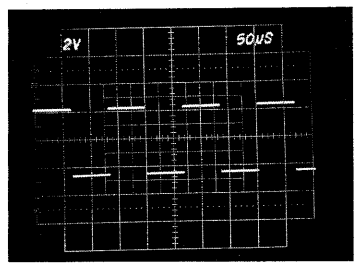

⑨

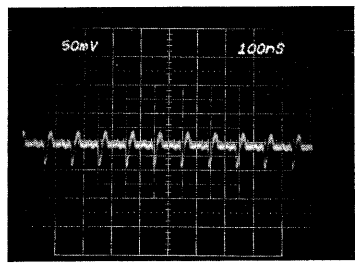

⑩

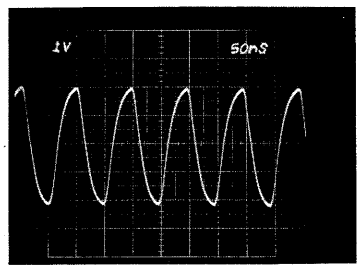

⑪

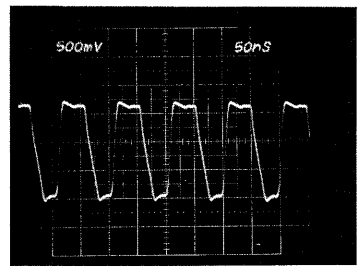

⑫

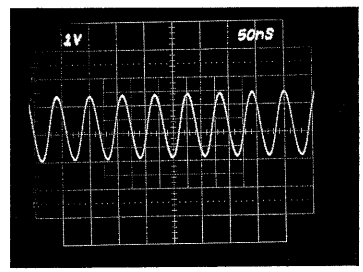

⑬

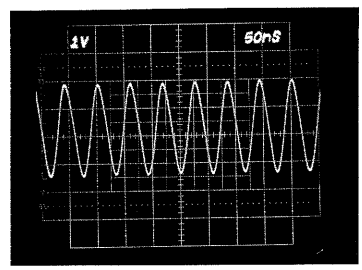

⑭

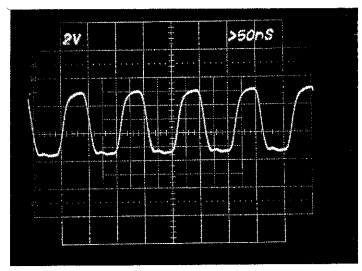

⑮

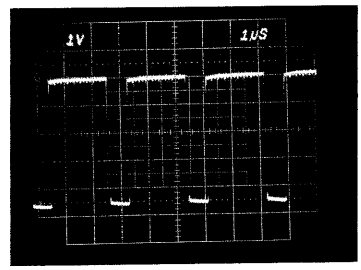

⑯

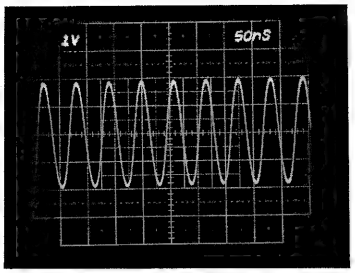
1V
50nS

⑰

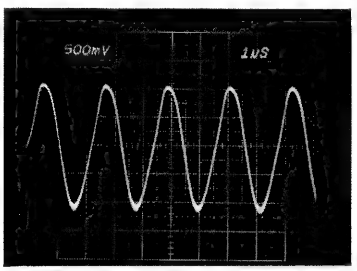
500mV
1uS

⑱

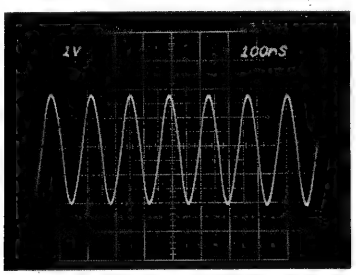
1V
100nS

⑲

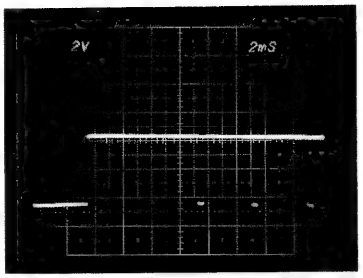
2V
2mS

⑳

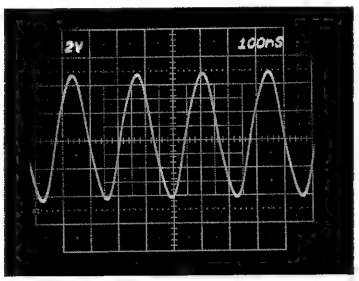
2V
100nS

㉑

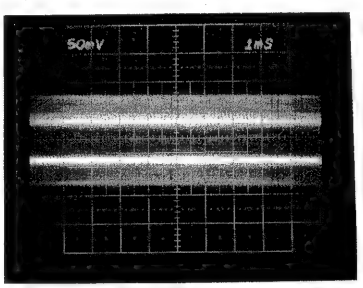
50mV
1mS

㉒

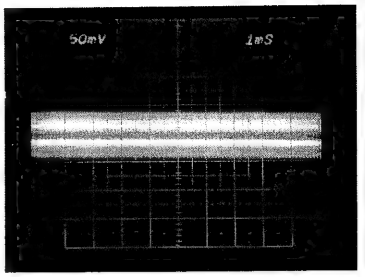
50mV
1mS

㉓

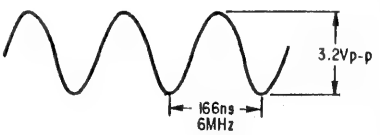
3.2Vp-p
166ns
6MHz

5-10. IC BLOCK DIAGRAM

- IC3
CXD1167Q

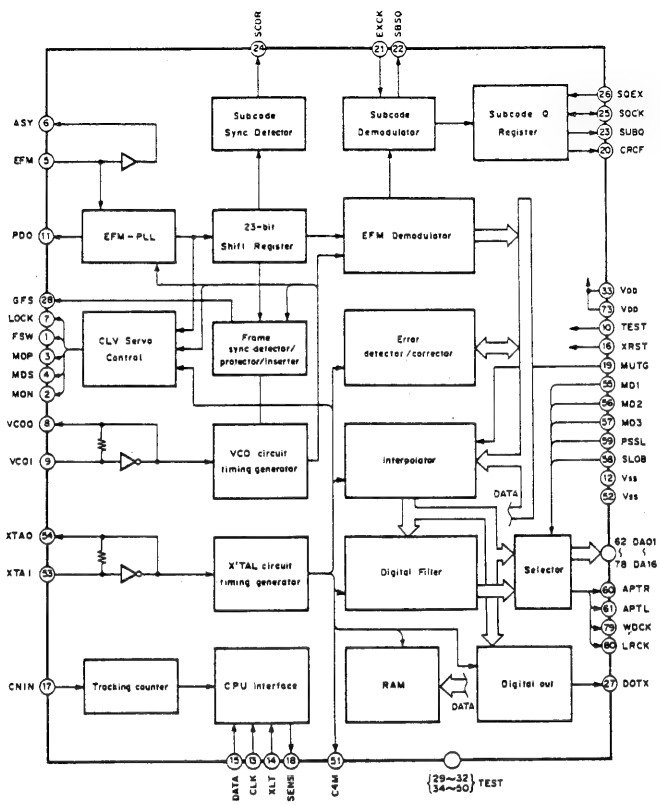

- IC2
CXA1082BQ

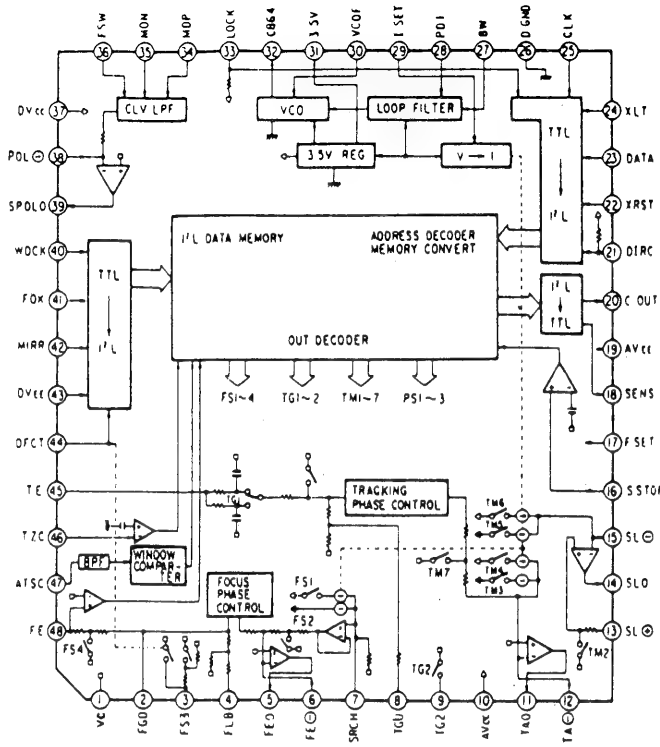

- IC1
CXA1081Q

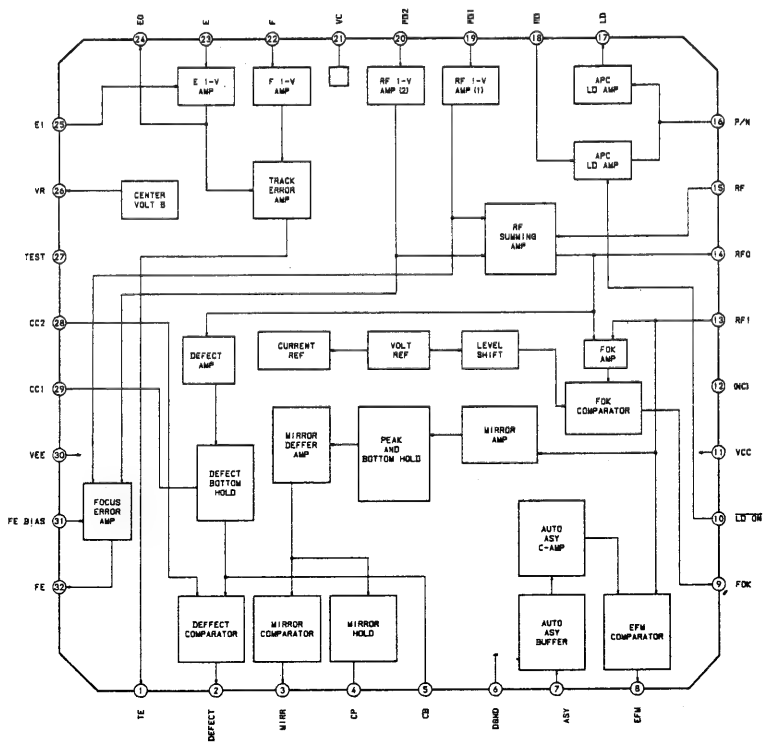

- IC4. 5

LA6533

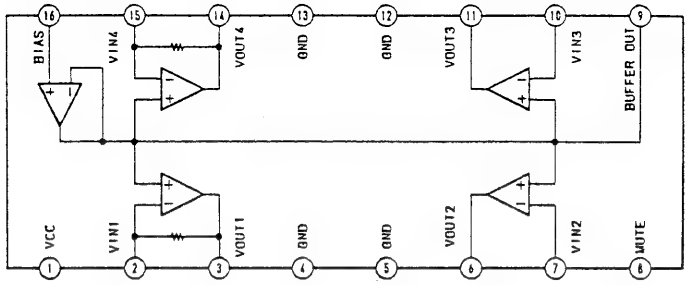

- IC604

LA1060

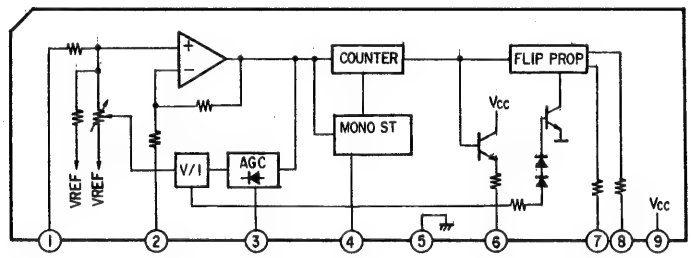

- IC603

LC7216M

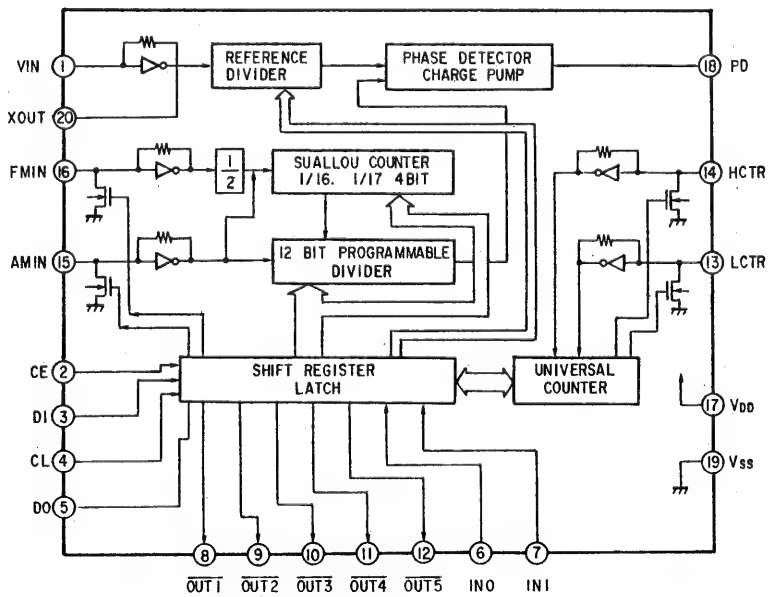

SECTION 6
EXPLODED VIEWS

NOTE:

- -XX,-X mean standardized parts, so they may have some difference from the original one.
- Color indication of Appearance Parts.
  Example:
  KNOB,BALANCE (WHITE) . . . (RED)
  ↑ Parts Color ↑ Cabinet's Color
- Items marked "*" are not stocked since they are seldom required for routine service. Some delay should be anticipated when ordering these items.
- The mechanical parts with no reference number in the exploded views are not supplied.
- Hardware (# mark) list is given in the last of this parts list.

The components identified by mark ⚠ or dotted line with mark ⚠ are critical for safety.
Replace only with part number specified.

Les composants identifiés par une marque ⚠ sont critiques pour la sécurité.
Ne les remplacer que par une pièce portant le numéro spécifé.

- Abbreviation
  CND: Canadian model

1. GENERAL SECTION (1)

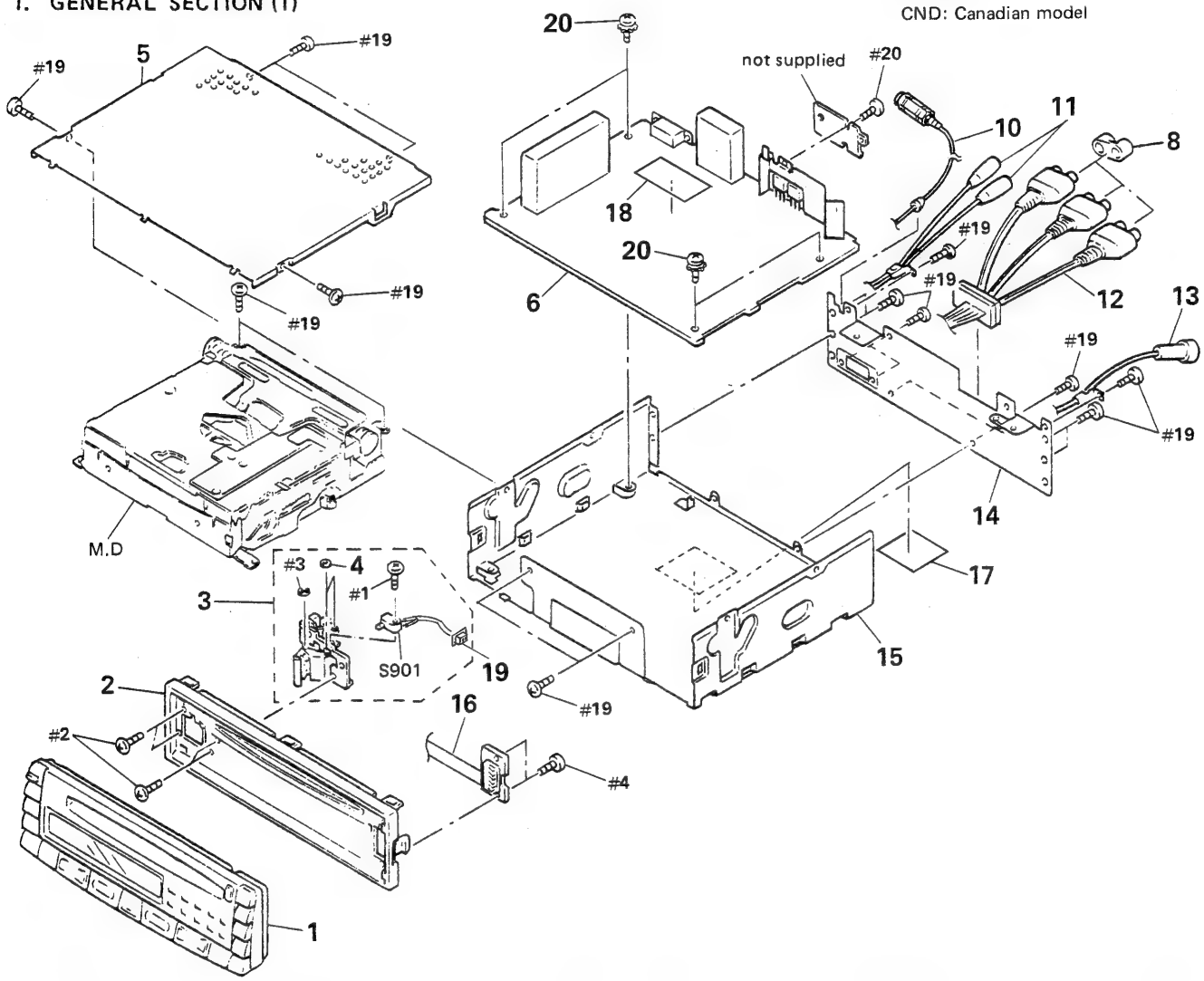

Ref.No.	Part No.	Description	Remark
1	A-3252-353-A	PANEL COMPLETE ASSY, FRONT	(US, CND)
1	A-3252-448-A	PANEL COMPLETE ASSY, FRONT	(E)
2	X-3363-884-1	PANEL (SUB) ASSY	
3	X-3363-885-1	HOLDER (LEVER) ASSY	
4	3-701-436-11	WASHER, STOPPER	
* 5	3-374-174-01	COVER	
* 6	A-3222-392-A	MAIN BOARD, COMPLETE	
6	A-3295-055-A	MAIN BOARD, COMPLETE	(E)
8	3-339-410-01	COVER (2), PIN JACK	
10	1-690-485-11	CORD (WITH CONNECTOR)	
11	1-690-212-21	CORD (WITH CONNECTOR)	(ANT)
12	1-690-483-11	CORD (WITH CONNECTOR)	

Ref.No.	Part No.	Description	Remark
13	1-690-484-21	CORD (WITH CONNECTOR)	(US, CND)
13	1-690-484-11	CORD (WITH CONNECTOR)	(E)
* 14	3-374-173-01	PANEL, BACK	
* 15	3-374-172-01	CHASSIS (MAIN)	
16	1-641-832-11	FLEXIBLE BOARD	
* 17	3-375-865-01	LABEL, MODEL NUMBER	(US)
* 17	3-375-866-01	LABEL, MODEL NUMBER	(CND)
17	3-380-706-01	LABEL, MODEL NUMBER	(E)
* 19	1-563-470-11	HOUSING, CONNECTOR 2P	
20	3-376-464-11	SCREW (+PTT 2.6X6)	GROUND POINT
S901	1-570-771-11	SWITCH (HOLDER ON/OFF)	

2. GENERAL SECTION (2)

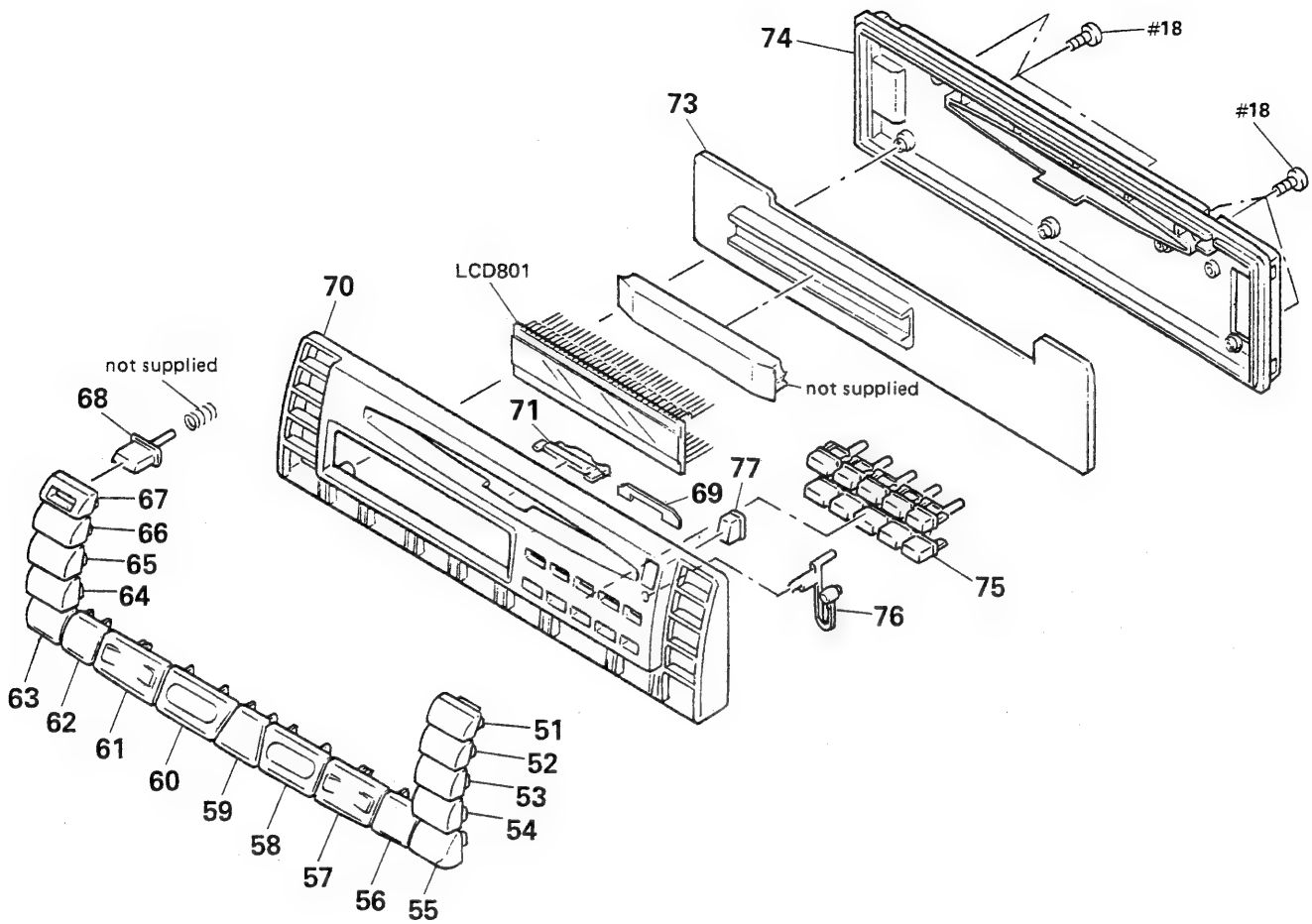

Ref. No.	Part No.	Description	Remark
51	3-374-082-01	BUTTON (CD)	
52	3-374-083-01	BUTTON (FM/AM) (US, CND)	
52	3-374-083-21	BUTTON (FM/AM) (E)	
53	3-374-084-01	BUTTON (TV/VIDEO) (US, CND)	
53	3-374-084-21	BUTTON (TV/VIDEO) (E)	
54	3-374-085-01	BUTTON (WALKMAN)	
55	3-374-094-01	BUTTON (DSPL)	
56	3-374-093-01	BUTTON (BTM M. SCAN)	
57	3-374-089-01	BUTTON (PRESET DISC)	
58	3-374-092-01	BUTTON (+)	
59	3-374-091-01	BUTTON (SELECT)	
60	3-374-090-01	BUTTON (-)	
61	3-374-088-01	BUTTON (SEEK AMS)	
62	3-374-087-01	BUTTON (LIST)	
63	3-374-086-01	BUTTON (MUTE)	
64	3-374-096-01	BUTTON (LOUD SENS)	

Ref. No.	Part No.	Description	Remark
65	3-374-095-01	BUTTON (OFF)	
66	3-374-097-01	FILTER	
67	3-374-182-01	COVER (RELEASE)	
68	3-374-181-01	BUTTON (RELEASE)	
* 69	3-377-193-01	DOOR (2), SHEET (US, CND)	
70	3-374-081-22	PANEL, FRONT	
70	3-374-081-12	PANEL, FRONT (E)	
* 71	3-374-183-01	PLATE (CENTER), LIGHT GUIDE	
* 73	A-3273-712-A	MOUNTED PCB (B), DISPLAY	
* 73	A-3273-716-A	MOUNTED PCB (B), DISPLAY (US, CND)	
74	3-374-198-01	PANEL, FRONT BACK	
75	3-374-184-01	BUTTON (10 GANG)	
76	3-374-196-01	BUTTON (RESET)	
77	3-374-185-01	BUTTON (EJECT)	
LCD801	1-809-561-11	DISPLAY PANEL, LIQUID CRYSTAL	

3. MD SECTION (1)

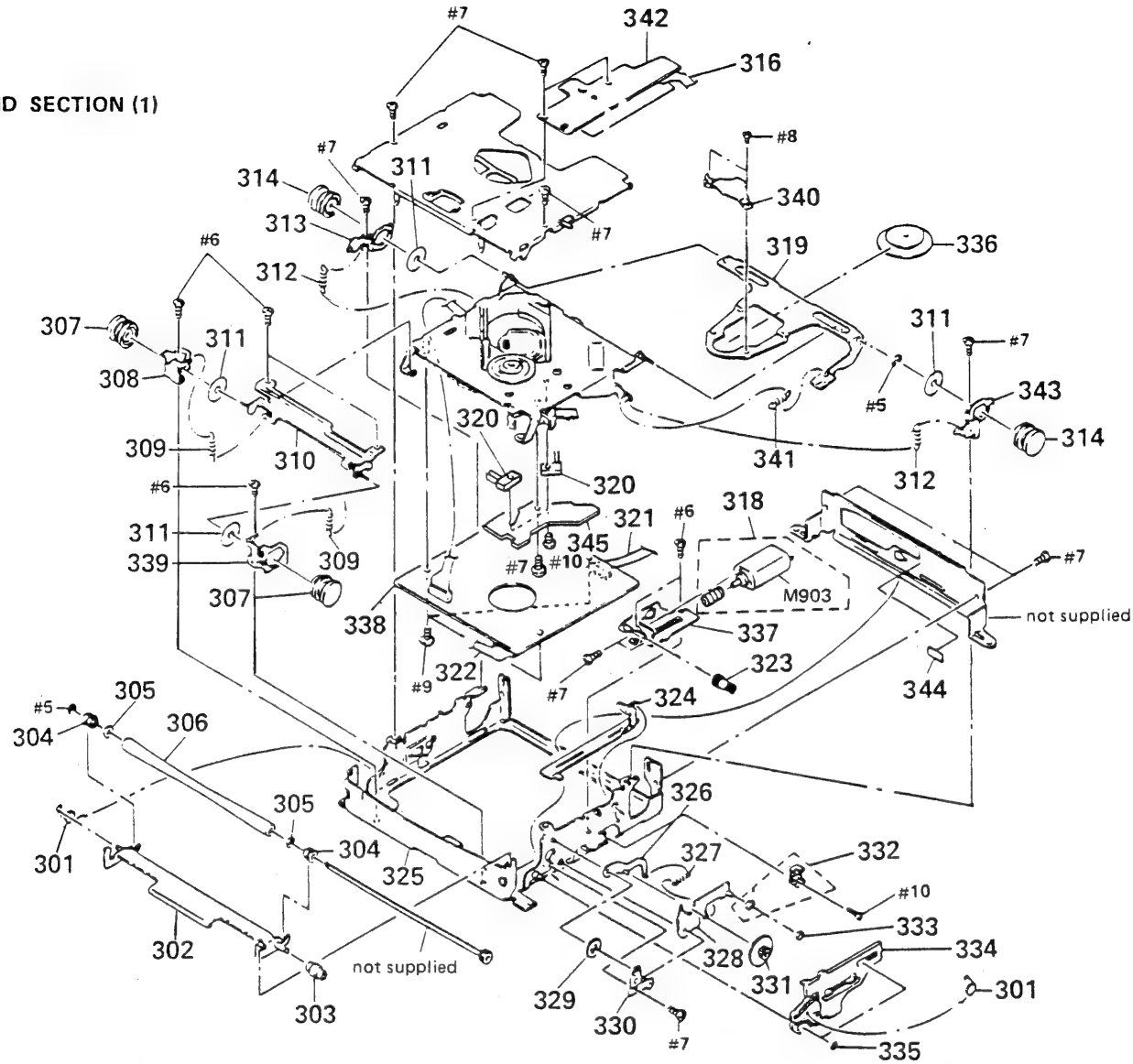

Ref. No.	Part No.	Description	Remark
301	3-351-437-01	SPRING (ROLLER)	
* 302	X-3351-422-1	BRACKET (ROLLER) ASSY	
303	3-351-495-01	SLEEVE (2)	
304	3-351-416-01	BEARING (ROLLER SHAFT)	
305	3-701-438-11	WASHER, 2.5	
306	3-323-231-11	ROLLER (LOWER)	
307	3-364-310-01	DAMPER (F)	
* 308	3-351-493-01	BRACKET (DAMPER B)	
309	3-351-444-01	SPRING (FLOATING A, B), TENSION	
* 310	X-3351-423-1	BRACKET (F) ASSY	
311	3-323-263-01	WASHER, TEFLON	
312	3-351-445-01	SPRING (FLOATING C, D), TENSION	
* 313	3-351-411-01	BRACKET (DAMPER D)	
314	3-330-929-11	DAMPER (S), HYPER	
316	1-634-332-11	(A) FLEXIBLE BOARD	
318	A-3249-535-A	GEAR (A) ASSY LOADING	
* 319	3-351-453-01	ARM, CHUCKING	
320	1-554-938-11	SWITCH, LEAF, G, E)	
321	1-634-333-11	(B) FLEXIBLE BOARD	
322	1-634-334-11	(C) FLEXIBLE BOARD	
323	3-351-498-01	GEAR (B, WORM WHEEL)	
* 324	X-3351-418-1	LEVER (CH RELEASE) ASSY	

Ref. No.	Part No.	Description	Remark
* 325	X-3351-417-2	CHASSIS (MAIN) ASSY	
* 326	X-3351-420-1	LEVER (GEAR C) ASSY	
327	3-351-463-01	SPRING (SW LEVER 2), TENSION	
* 328	X-3351-421-1	LEVER (SW) ASSY	
329	3-351-414-01	GEAR (C)	
* 330	3-351-482-01	RETAINER (SIDE GEAR 2)	
331	3-351-438-01	GEAR, CAM	
332	1-454-461-11	SOLENOID, PLUNGER	
333	3-315-384-11	WASHER, STOPPER	
334	3-351-456-01	LEVER (L, E)	
335	3-578-224-00	WASHER	
336	3-348-558-01	PLATE (F) CHUCK	
* 337	X-3351-419-1	BRACKET (M) ASSY	
* 338	A-3279-978-A	RF BOARD, COMPLETE	
* 339	3-351-492-01	BRACKET (DUMPER A)	
340	3-342-625-01	RETAINER (S2), THRUST	
341	3-351-443-01	SPRING (CHUCKING), TENSION	
* 342	1-634-331-11	LED BORAD	
* 343	3-351-494-01	BRACKET (DUMPER C)	
* 344	3-351-464-01	SHEET (SM), INSULATING	
345	1-634-330-11	SENSOR BOARD	
M903	1-541-560-11	MOTOR, DC	

4. MD SECTION (2)

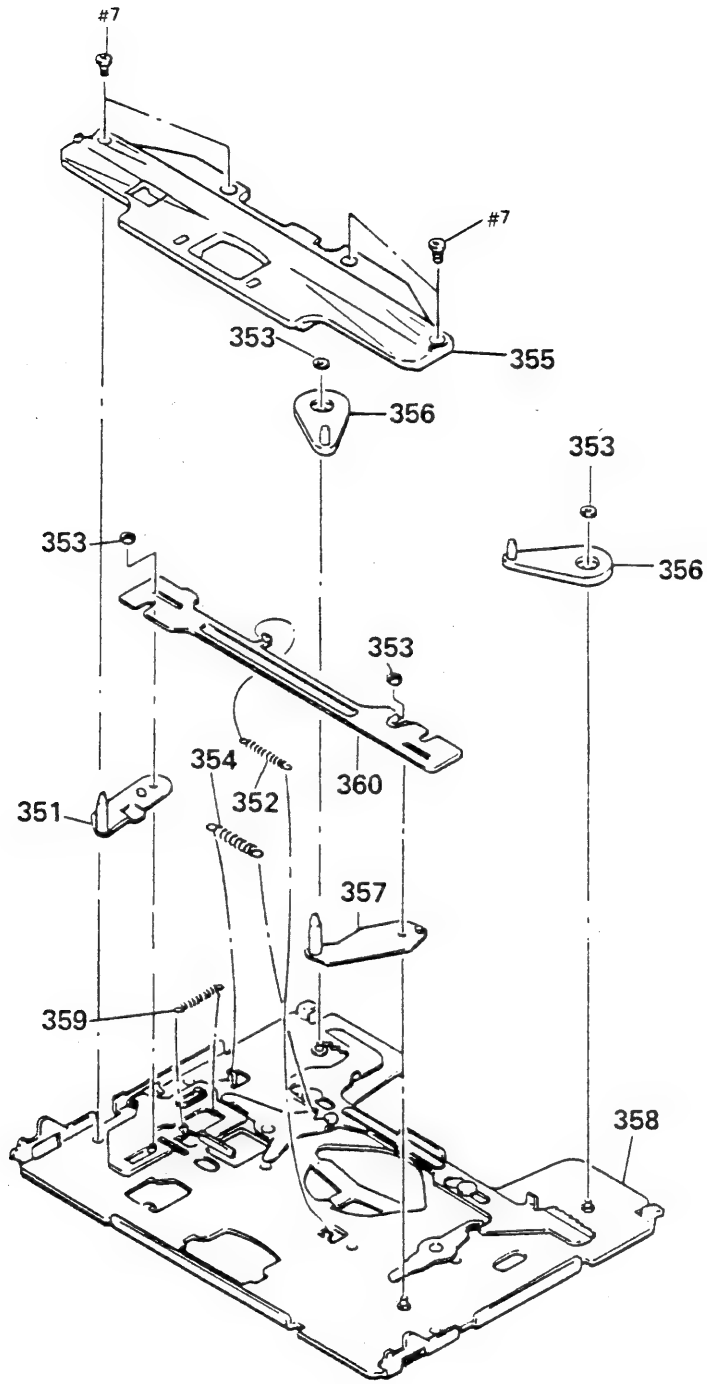

Ref. No.	Part No.	Description	Remark
* 351	X-3351-426-1	LEVER (D DETECTION R2) ASSY	
352	3-351-447-02	SPRING (JOINT F), TENSION	
353	3-578-224-00	WASHER	
354	3-351-446-01	SPRING (JOINT R), TENSION	
355	3-351-496-01	GUIDE (DISK 2)	
356	3-351-432-01	GEAR (DS)	
* 357	X-3351-425-1	LEVER (D DETECTION L2) ASSY	
* 358	X-3351-424-1	CHASSIS (T2) ASSY	
359	3-351-448-01	SPRING (LOCK LEVER), TENSION	
* 360	3-351-489-02	JOINT (F2)	

5. MD SECTION (3)

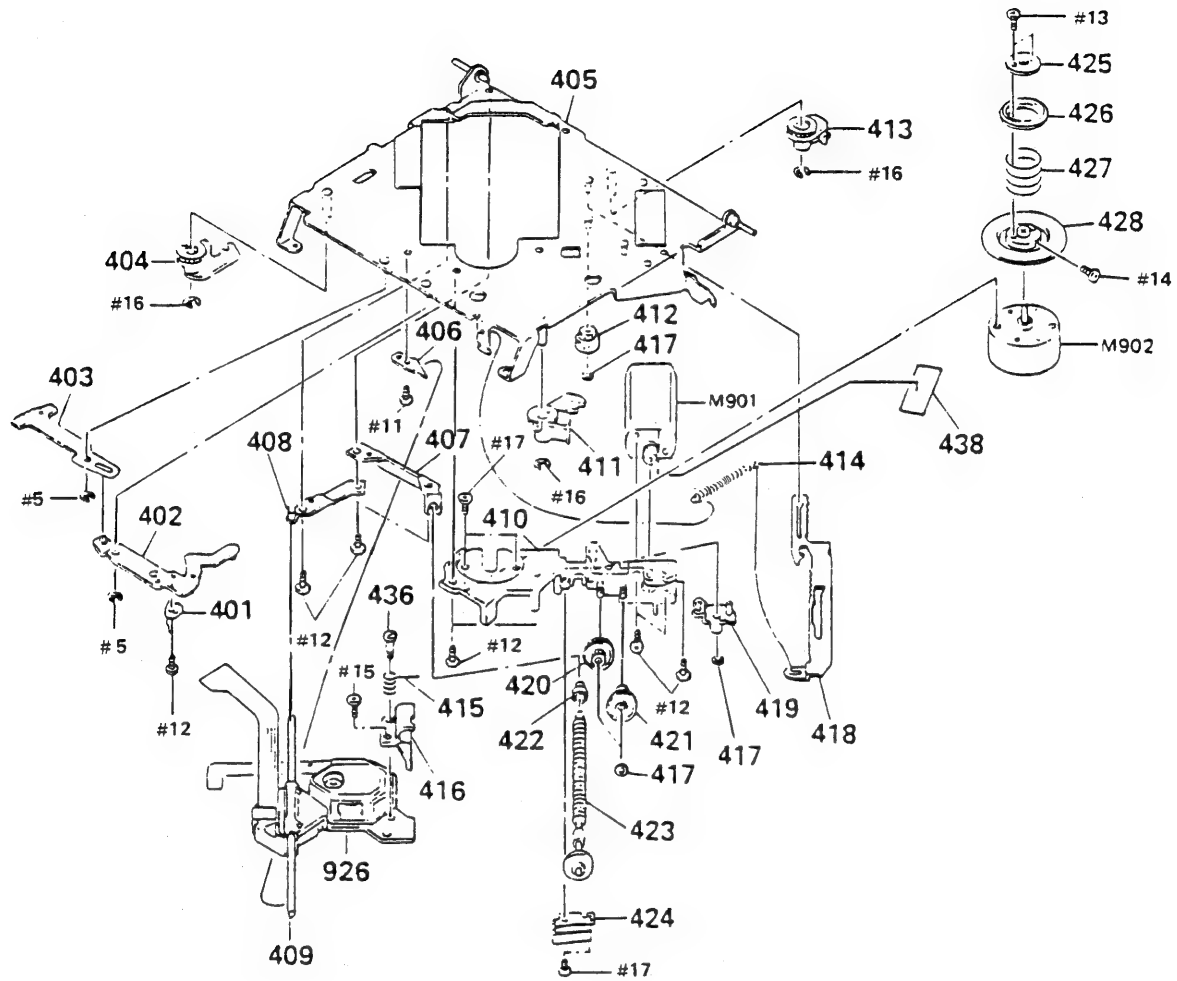

Ref.No.	Part No.	Description	Remark
* 401	2-643-407-01	PLATE, SWITCH	
* 402	X-2641-534-1	LEVER (A) ASSY, LOCK	
* 403	2-641-582-01	LEVER (B), LOCK	
404	2-643-414-02	GEAR (B), LOCK	
* 405	X-2641-536-2	CHASSIS ASSY, MAIN	
406	2-643-402-01	RETAINER (B), SHAFT	
407	2-643-403-01	RETAINER, FEED SCREW	
408	2-643-401-01	RETAINER (A), SHAFT	
409	2-640-632-01	SHAFT, GUIDE	
* 410	X-2641-535-2	CHASSIS ASSY, SUB. 3A)	
411	2-643-413-02	GEAR (A), LOCK	
412	2-643-405-01	WHEEL, WORM	
413	2-641-599-02	GEAR (C), GEAR	
414	2-641-595-02	SPRING, TENSION	
415	2-643-420-01	SPRING	
416	2-643-412-02	NUT, FEED	
417	3-321-813-01	WASHER, COTTER POLYETHYLENE	
* 418	2-641-583-02	LEVER (C), LOCK	
419	2-643-406-02	LEVER, SELECTION	
420	2-643-410-01	GEAR (E)	

Ref.No.	Part No.	Description	Remark
421	2-643-409-01	GEAR (D)	
422	2-643-408-02	RETAINER, THRUST	
423	A-4910-184-A	SCREW ASSY, FEED	
424	2-643-404-01	SPRING	
425	2-640-650-01	STOPPER, RING	
426	2-643-418-01	RING, CENTER	
427	2-640-617-02	SPRING, COMPRESSION	
428	X-2641-541-1	TURNTABLE ASSY	
436	2-643-423-01	SCREW, SP	
438	3-351-469-01	SHEEET, MOTOR	
⚠ 926	8-848-224-11	DEVICE, OPTICAL KSS-320B	
M901	A-4910-183-A	MOTOR ASSY, SLED	
M902	1-541-448-41	MOTOR (SPINDLE)	

Note:
The components identified by mark ⚠ or dotted line with mark ⚠ are critical for safety.
Replace only with part number specified.

Note:
Les composants identifiés par une marque ⚠ sont critiques pour la sécurité.
Ne les remplacer que par une pièce portant le numéro spécifié.

DISPLAY

SECTION 7
ELECTRICAL PARTS LIST

NOTE:

- Due to standardization, replacements in the parts list may be different from the part specified in the diagrams or the components used on the set.
- -XX,-X mean standardized parts, so they may have some difference from the original one.
- RESISTORS
  All resistors are in ohms
  METAL : Metal-film resistor
  METAL OXIDE : Metal Oxide-film resistor
  F : nonflammable
- Items marked "＊" are not stocked since they are seldom required for routine service. Some delay should be anticipated when ordering these items.
- SEMICONDUCTORS
  In each case,u : μ ,for example :
  uA... : μA..., uPA... : μPA...,
  uPB... : μPB..., uPC... : μPC...,
  uPD... : μPD...
- CAPACITORS
  uF : μF
- COILS
  uH : μH

When indicating parts by reference number, please include the board name.

- Abbreviation
  CND: Canadian model

Ref.No.	Part No.	Description			Remark
	A-3273-716-A	DISPLAY BOARD, COMPLETE			
		**********			
		< CAPACITOR >			
C801	1-164-232-11	CERAMIC CHIP	0.01uF	50V	
C802	1-163-037-11	CERAMIC CHIP	0.022uF 10%	25V	
C803	1-135-149-21	CERAMIC CHIP	0.0022uF 5%	50V	
C804	1-164-232-11	CERAMIC CHIP	0.01uF	50V	
C805	1-164-222-11	CERAMIC CHIP	0.22uF	25V	
C806	1-164-222-11	CERAMIC CHIP	0.22uF	25V	
		< JACK >			
CNJ801	1-580-806-21	CONNECTOR, PLUG 10P			
		< DIODE >			
D801	8-719-987-45	DIODE	CL-155Y/PG-CD		
D802	8-719-987-45	DIODE	CL-155Y/PG-CD		
D803	8-719-987-45	DIODE	CL-155Y/PG-CD		
D804	8-719-987-45	DIODE	CL-155Y/PG-CD		
D805	8-719-987-45	DIODE	CL-155Y/PG-CD		
D806	8-719-987-45	DIODE	CL-155Y/PG-CD		
D807	8-719-987-45	DIODE	CL-155Y/PG-CD		
D808	8-719-987-45	DIODE	CL-155Y/PG-CD		
D809	8-719-987-45	DIODE	CL-155Y/PG-CD		
D810	8-719-987-45	DIODE	CL-155Y/PG-CD		
D811	8-719-987-45	DIODE	CL-155Y/PG-CD		
D812	8-719-987-45	DIODE	CL-155Y/PG-CD		
D813	8-719-987-45	DIODE	CL-155Y/PG-CD		
D814	8-719-987-45	DIODE	CL-155Y/PG-CD		
D815	8-719-987-45	DIODE	CL-155Y/PG-CD		
D816	8-719-987-45	DIODE	CL-155Y/PG-CD		
D817	8-719-987-45	DIODE	CL-155Y/PG-CD		
D818	8-719-987-45	DIODE	CL-155Y/PG-CD		
D819	8-719-987-45	DIODE	CL-155Y/PG-CD		
D820	8-719-987-45	diode	C1-155Y/PG-CD		
D821	8-719-987-45	DIODE	CL-155Y/PG-CD		
D822	8-719-987-45	DIODE	CL-155Y/PG-CD		
D823	8-719-987-45	DIODE	CL-155Y/PG-CD		
D824	8-719-987-45	DIODE	CL-155Y/PG-CD		
D825	8-719-987-45	DIODE	CL-155Y/PG-CD		
D826	8-719-987-45	DIODE	CL-155Y/PG-CD		
D827	8-719-987-45	DIODE	CL-155Y/PG-CD		
D829	8-719-987-45	DIODE	CL-155Y/PG-CD		
D830	8-719-987-45	DIODE	CL-155Y/PG-CD		
D831	8-719-987-45	DIODE	CL-155Y/PG-CD		
D832	8-719-422-64	DIODE	MA8062-M		
D833	8-719-422-64	DIODE	MA8062-M		
D834	8-719-422-64	DIODE	MA8062-M		
D835	8-719-422-64	DIODE	MA8062-M		
D836	8-719-404-46	DIODE	MA110		
D837	8-719-404-46	DIODE	MA110		
D838	8-719-404-46	DIODE	MA110		
D839	8-719-404-46	DIODE	MA110		
D840	8-719-404-46	DIODE	MA110		
D841	8-719-404-46	DIODE	MA110		
D842	8-719-404-46	DIODE	MA110		
D843	8-719-404-46	DIODE	MA110		
D844	8-719-422-64	DIODE	MA8062-M		
D845	8-719-422-43	DIODE	MA8051-H		
D846	8-719-404-46	DIODE	MA110		
		< IC >			
IC801	8-759-981-65	IC	LM2903M		
IC802	8-759-067-68	IC	uPD75008GB-679-3B4		
IC803	8-759-246-16	IC	TC9240F		
IC804	8-759-515-60	IC	RS-20		

Ref.No.	Part No.	Description			Remark
		< JUMPER RESISTOR >			
JR801	1-216-295-00	METAL CHIP	0	5%	1/10W
		< COIL >			
L801	1-410-204-31	INDUCTOR CHIP	10uH		
		< DISPLAY PANEL >			
LCD801	1-809-561-11	DISPLAY PANEL, LIQUID CRYSTAL			
		< PILOT LAMP >			
PL801	1-518-677-21	LAMP, PILOT			
PL802	1-518-678-21	LAMP, PILOT			
PL803	1-518-678-21	LAMP, PILOT			
PL804	1-518-677-21	LAMP, PILOT			
		< TRANSISTOR >			
Q801	8-729-901-05	TRANSISTOR	DTA124EK		
Q802	8-729-920-74	TRANSISTOR	2SC2412K-QR		
Q803	8-729-920-74	TRANSISTOR	2SC2412K-QR		
Q804	8-729-904-57	TRANSISTOR	DTB114EK		
Q805	8-729-900-53	TRANSISTOR	DTC114EK		
Q806	8-729-900-53	TRANSISTOR	DTC114EK		
Q807	8-729-904-57	TRANSISTOR	DTB114EK		
Q808	8-729-904-66	TRANSISTOR	DTD113EK		
Q809	8-729-904-66	TRANSISTOR	DTD113EK		
Q810	8-729-904-66	TRANSISTOR	DTD113EK		
Q811	8-729-904-66	TRANSISTOR	DTD113EK		
		< RESISTOR >			
R801	1-216-182-00	METAL GLAZE	220	5%	1/8W
R802	1-216-178-00	METAL GLAZE	150	5%	1/8W
R803	1-216-188-00	METAL GLAZE	390	5%	1/8W
R804	1-216-184-00	METAL GLAZE	270	5%	1/8W
R805	1-216-184-00	METAL GLAZE	270	5%	1/8W
R806	1-216-188-00	METAL GLAZE	390	5%	1/8W
R807	1-216-182-00	METAL GLAZE	220	5%	1/8W
R808	1-216-178-00	METAL GLAZE	150	5%	1/8W
R809	1-216-188-00	METAL GLAZE	390	5%	1/8W
R810	1-216-184-00	METAL GLAZE	270	5%	1/8W
R811	1-216-178-00	METAL GLAZE	150	5%	1/8W
R812	1-216-182-00	METAL GLAZE	220	5%	1/8W
R813	1-216-182-00	METAL GLAZE	220	5%	1/8W
R814	1-216-182-00	METAL GLAZE	220	5%	1/8W
R815	1-216-178-00	METAL GLAZE	150	5%	1/8W
R816	1-216-178-00	METAL GLAZE	150	5%	1/8W
R817	1-216-188-00	METAL GLAZE	390	5%	1/8W
R818	1-216-184-00	METAL GLAZE	270	5%	1/8W
R819	1-216-182-00	METAL GLAZE	220	5%	1/8W
R820	1-216-178-00	METAL GLAZE	150	5%	1/8W
R821	1-216-184-00	METAL GLAZE	270	5%	1/8W
R822	1-216-188-00	METAL GLAZE	390	5%	1/8W
R823	1-216-188-00	METAL GLAZE	390	5%	1/8W
R824	1-216-184-00	METAL GLAZE	270	5%	1/8W
R825	1-216-025-00	METAL CHIP	100	5%	1/10W
R826	1-216-089-00	METAL CHIP	47K	5%	1/10W
R827	1-216-089-00	METAL CHIP	47K	5%	1/10W
R828	1-216-089-00	METAL CHIP	47K	5%	1/10W
R829	1-216-105-00	METAL CHIP	220K	5%	1/10W
R830	1-216-081-00	METAL CHIP	22K	5%	1/10W
R831	1-216-063-00	METAL CHIP	3.9K	5%	1/10W
R832	1-216-089-00	METAL CHIP	47K	5%	1/10W
R833	1-216-105-00	METAL CHIP	220K	5%	1/10W
R834	1-216-065-00	METAL CHIP	4.7K	5%	1/10W
R835	1-216-065-00	METAL CHIP	4.7K	5%	1/10W
R836	1-216-089-00	METAL CHIP	47K	5%	1/10W
R837	1-216-073-00	METAL CHIP	10K	5%	1/10W
R838	1-216-049-00	METAL CHIP	1K	5%	1/10W
R839	1-216-049-00	METAL CHIP	1K	5%	1/10W
R840	1-216-049-00	METAL CHIP	1K	5%	1/10W
R841	1-216-089-00	METAL CHIP	47K	5%	1/10W
R842	1-216-097-00	METAL CHIP	100K	5%	1/10W
R843	1-216-049-00	METAL CHIP	1K	5%	1/10W
R844	1-216-041-00	METAL CHIP	470	5%	1/10W
R845	1-216-049-00	METAL CHIP	1K	5%	1/10W
		< SWITCH >			
S801	1-692-037-41	SWITCH, KEY BOARD (CD)			
S802	1-692-037-41	SWITCH, KEY BOARD (FM/AM)			
S803	1-692-037-41	SWITCH, KEY BOARD (TV/VIDEO)			
S804	1-692-037-41	SWITCH, KEY BOARD (WALKMAN)			
S805	1-692-037-41	SWITCH, KEY BOARD (DSPL)			
S806	1-692-037-41	SWITCH, KEY BOARD (⏏)			
S807	1-692-037-41	SWITCH, KEY BOARD (5)			
S808	1-692-037-41	SWITCH, KEY BOARD (10)			
S809	1-692-037-41	SWITCH, KEY BOARD (BTM M.SCAN)			
S810	1-692-037-41	SWITCH, KEY BOARD (4)			
S811	1-692-037-41	SWITCH, KEY BOARD (9)			
S812	1-692-037-41	SWITCH, KEY BOARD (PRESET DISC +)			
S813	1-692-037-41	SWITCH, KEY BOARD (3)			
S814	1-692-037-41	SWITCH, KEY BOARD (8)			
S815	1-692-037-41	SWITCH, KEY BOARD (2)			
S816	1-692-037-41	SWITCH, KEY BOARD (7)			
S817	1-692-037-41	SWITCH, KEY BOARD (PRESET DISC -)			
S818	1-692-037-41	SWITCH, KEY BOARD (6)			
S819	1-692-037-41	SWITCH, KEY BOARD (1)			
S820	1-692-037-41	SWITCH, KEY BOARD (+)			
S821	1-692-037-41	SWITCH, KEY BOARD (SEL)			

DISPLAY FLEXIBLE LED MAIN

Ref.No.	Part No.	Description	Remark
S822	1-692-037-41	SWITCH, KEY BOARD (-)	
S823	1-692-037-41	SWITCH, KEY BOARD (SEEK MAS +)	
S824	1-692-037-41	SWITCH, KEY BOARD (SEEK MAS -)	
S825	1-692-037-41	SWITCH, KEY BOARD (LIST)	
S826	1-692-037-41	SWITCH, KEY BOARD (OFF)	
S827	1-692-037-41	SWITCH, KEY BOARD (LOUD SENS)	
S828	1-692-037-41	SWITCH, KEY BOARD (MUTE)	
		< VIBRATOR >	
X801	1-567-775-11	VIBRATOR, CERAMIC (4.19MHz)	
**********			
	1-641-832-11	FLEXIBLE BOARD	
		**********	
	1-580-807-22	CONNECTOR, SOCKET 10P	
		< SWITCH >	
S902	1-570-204-11	SWITCH, KEY BOARD	
**********			
*	1-634-331-11	LED BOARD	
		*********	
	1-634-332-11	(A) FLEXIBLE BOARD	
*	3-355-252-01	SHEET (MD), INSULATING	
		< DIODE >	
D80	8-719-404-19	DIODE LN1251C	
D81	8-719-404-19	DIODE LN1251C	
D82	8-719-404-19	DIODE LN1251C	
		< SWITCH >	
SW80	1-571-754-11	SWITCH, PUSH (1 KEY)	
SW81	1-571-754-11	SWITCH, PUSH (1 KEY)	
**********			
*	A-3222-392-A	MAIN BOARD, COMPLETE	
		**********	
*	3-376-574-01	HEAT SINK (2)	
*	3-377-287-01	PLATE, SHIELD	
		< BUZZER >	
BZ501	1-529-078-11	BUZZER, PIEZOELECTRIC	
		< CAPACITOR >	
C101	1-126-157-11	ELECT 10uF 20% 16V	
C102	1-126-157-11	ELECT 10uF 20% 16V	

Ref.No.	Part No.	Description			Remark
C105	1-124-589-11	ELECT	47uF	20%	16V
C106	1-136-162-00	FILM	0.056uF	5%	50V
C107	1-136-162-00	FILM	0.056uF	5%	50V
C108	1-130-476-00	MYLAR	0.0027uF	5%	50V
C110	1-124-464-11	ELECT	0.22uF	20%	50V
C111	1-130-477-00	MYLAR	0.0033uF	5%	50V
C113	1-124-229-00	ELECT	33uF	20%	10V
C114	1-163-125-00	CERAMIC CHIP	220PF	5%	50V
C115	1-130-475-00	MYLAR	0.0022uF	5%	50V
C116	1-163-117-00	CERAMIC CHIP	100PF	5%	50V
C117	1-163-117-00	CERAMIC CHIP	100PF	5%	50V
C118	1-163-125-00	CERAMIC CHIP	220PF	5%	50V
C120	1-124-499-11	ELECT, NONPOLAR	1uF	20%	50V
C121	1-126-300-11	ELECT	0.47uF	20%	50V
C122	1-126-288-11	ELECT	4.7uF	20%	16V
C124	1-163-117-00	CERAMIC CHIP	100PF	5%	50V
C125	1-126-157-11	ELECT	10uF	20%	10V
C201	1-126-157-11	ELECT	10uF	20%	16V
C202	1-126-157-11	ELECT	10uF	20%	16V
C205	1-124-589-11	ELECT	47uF	20%	16V
C206	1-136-162-00	FILM	0.056uF	5%	50V
C207	1-136-162-00	FILM	0.056uF	5%	50V
C208	1-130-476-00	MYLAR	0.0027uF	5%	50V
C210	1-124-464-11	ELECT	0.22uF	20%	50V
C211	1-130-477-00	MYLAR	0.0033uF	5%	50V
C213	1-124-229-00	ELECT	33uF	20%	10V
C214	1-163-125-00	CERAMIC CHIP	220PF	5%	50V
C215	1-130-475-00	MYLAR	0.0022uF	5%	50V
C216	1-163-117-00	CERAMIC CHIP	100PF	5%	50V
C217	1-163-117-00	CERAMIC CHIP	100PF	5%	50V
C218	1-163-125-00	CERAMIC CHIP	220PF	5%	50V
C220	1-124-499-11	ELECT, NONPOLAR	1uF	20%	50V
C221	1-126-300-11	ELECT	0.47uF	20%	50V
C222	1-126-288-11	ELECT	4.7uF	20%	16V
C224	1-163-117-00	CERAMIC CHIP	100PF	5%	50V
C225	1-126-157-11	ELECT	10uF	20%	10V
C301	1-163-037-11	CERAMIC CHIP	0.022uF	10%	25V
C302	1-124-589-11	ELECT	47uF	20%	16V
C303	1-124-589-11	ELECT	47uF	20%	16V
C304	1-124-589-11	ELECT	47uF	20%	16V
C305	1-126-157-11	ELECT	10uF	20%	16V
C306	1-128-054-11	ELECT	22uF	20%	10V
C308	1-124-589-11	ELECT	47uF	20%	16V
C309	1-124-589-11	ELECT	47uF	20%	16V
C310	1-124-499-11	ELECT, NONPOLAR	1uF	20%	50V
C311	1-163-141-00	CERAMIC CHIP	0.001uF	5%	50V (US, CND)
C501	1-163-037-11	CERAMIC CHIP	0.022uF	10%	25V
C502	1-163-038-00	CERAMIC CHIP	0.1uF		25V
C503	1-163-037-11	CERAMIC CHIP	0.022uF	10%	25V

Ref.No.	Part No.	Description			Remark
C504	1-163-038-00	CERAMIC CHIP	0.1uF		25V
C505	1-163-037-11	CERAMIC CHIP	0.022uF	10%	25V
C506	1-163-229-11	CERAMIC CHIP	12PF	5%	50V
C507	1-163-038-00	CERAMIC CHIP	0.1uF		25V
C508	1-163-037-11	CERAMIC CHIP	0.022uF	10%	25V
C509	1-125-559-11	CAP, DOUBLE LAYERS		0.047F	
C510	1-124-589-11	ELECT	47uF	20%	16V
C511	1-124-589-11	ELECT	47uF	20%	16V
C512	1-126-154-11	ELECT	47uF	20%	6.3V
C514	1-163-037-11	CERAMIC CHIP	0.022uF	10%	25V
C515	1-126-157-11	ELECT	10uF	20%	16V
C516	1-126-157-11	ELECT	10uF	20%	16V
C517	1-126-157-11	ELECT	10uF	20%	16V
C518	1-126-936-11	ELECT	3300uF	20%	16V
C519	1-163-229-11	CERAMIC CHIP	12PF	5%	50V
C520	1-163-038-00	CERAMIC CHIP	0.1uF		25V
C531	1-163-038-00	CERAMIC CHIP	0.1uF		25V
C532	1-163-038-00	CERAMIC CHIP	0.1uF		25V
C533	1-163-038-00	CERAMIC CHIP	0.1uF		25V
C534	1-124-229-00	ELECT	33uF	20%	10V
C540	1-161-379-00	CERAMIC CHIP	0.01uF	30%	16V
C542	1-161-379-00	CERAMIC CHIP	0.01uF	30%	16V
C601	1-163-038-00	CERAMIC CHIP	0.1uF		25V
C602	1-163-038-00	CERAMIC CHIP	0.1uF		25V
C603	1-163-097-00	CERAMIC CHIP	15PF	5%	50V
C604	1-163-097-00	CERAMIC CHIP	15PF	5%	50V
C605	1-124-589-11	ELECT	47uF	20%	16V
C606	1-163-037-11	CERAMIC CHIP	0.022uF	10%	25V
C607	1-124-229-00	ELECT	33uF	20%	10V
C608	1-163-037-11	CERAMIC CHIP	0.022uF	10%	25V
C609	1-126-157-11	ELECT	10uF	20%	16V
C610	1-136-169-00	FILM	0.22uF	5%	50V
C611	1-130-479-00	MYLAR	0.0047uF	5%	50V
C617	1-124-464-11	ELECT	0.22uF	20%	50V
C618	1-126-301-11	ELECT	1uF	20%	50V
C619	1-126-301-11	ELECT	1uF	20%	50V
C620	1-136-153-00	FILM	0.01uF	5%	50V
C621	1-163-157-00	FILM	0.022uF	5%	50V
C622	1-130-474-00	MYLAR	0.0018uF	5%	50V
C623	1-126-288-11	ELECT	4.7uF	20%	16V
C624	1-130-477-00	MYLAR	0.0033uF	5%	50V
C625	1-128-054-11	ELECT	22uF	20%	10V
C626	1-126-288-11	ELECT	4.7uF	20%	16V
C627	1-124-257-00	ELECT	2.2uF	20%	50V
C629	1-163-017-00	CERAMIC CHIP	0.0047uF	5%	50V
C630	1-126-157-11	ELECT	10uF	20%	16V
C631	1-164-232-11	CERAMIC CHIP	0.01uF		50V
C632	1-163-037-11	CERAMIC CHIP	0.022uF	10%	25V
C633	1-163-141-00	CERAMIC CHIP	0.001uF	5%	50V
C634	1-163-117-00	CERAMIC CHIP	100PF	5%	50V
C635	1-164-695-11	CERAMIC CHIP	0.0022uF	5%	50V
C636	1-164-232-11	CERAMIC CHIP	0.01uF		50V
C637	1-163-117-00	CERAMIC CHIP	100PF	5%	50V
C638	1-163-017-00	CERAMIC CHIP	0.0047uF	5%	50V
C639	1-163-141-00	CERAMIC CHIP	0.001uF	5%	50V
C640	1-163-141-00	CERAMIC CHIP	0.001uF	5%	50V
C641	1-163-141-00	CERAMIC CHIP	0.001uF	5%	50V
C642	1-163-037-11	CERAMIC CHIP	0.022uF	10%	25V (E)
C642	1-136-171-00	FILM	0.033uF	5%	50V (US, CND)
C643	1-163-037-11	CERAMIC CHIP	0.022uF	10%	25V (E)
C643	1-136-171-00	FILM	0.033uF	5%	50V (US, CND)
C645	1-163-037-11	CERAMIC CHIP	0.022uF	10%	25V
C646	1-163-037-11	CERAMIC CHIP	0.022uF	10%	25V
C647	1-164-232-11	CERAMIC CHIP	0.01uF	10%	50V
C648	1-163-141-00	CERAMIC CHIP	0.001uF	5%	50V
C649	1-124-229-00	ELECT	33uF	20%	10V
C652	1-164-232-11	CERAMIC CHIP	0.01uF	10%	50V
C902	1-126-154-11	ELECT	47uF	20%	6.3V
C903	1-163-038-00	CERAMIC CHIP	0.1uF		25V
C904	1-126-154-11	ELECT	47uF	20%	6.3V
C905	1-163-038-00	CERAMIC CHIP	0.1uF		25V
C906	1-163-038-00	CERAMIC CHIP	0.1uF		25V
C908	1-163-235-11	CERAMIC CHIP	22PF	5%	50V
C909	1-163-235-11	CERAMIC CHIP	22PF	5%	50V
C910	1-163-038-00	CERAMIC CHIP	0.1uF		25V
C911	1-163-038-00	CERAMIC CHIP	0.1uF		25V
C912	1-163-038-00	CERAMIC CHIP	0.1uF		25V
C914	1-126-154-11	ELECT	47uF	20%	6.3V
C915	1-124-589-11	ELECT	47uF	20%	16V
C916	1-163-038-00	CERAMIC CHIP	0.1uF		25V
C917	1-163-038-00	CERAMIC CHIP	0.1uF		25V
C920	1-161-375-00	CERAMIC	2200PF	20%	50V (US, CND)
C950	1-124-589-11	ELECT	47uF	20%	16V
C951	1-126-157-11	ELECT	10uF	20%	16V
C952	1-126-157-11	ELECT	10uF	20%	16V
C953	1-126-916-11	ELECT	1000uF	20%	6.3V
C954	1-126-927-11	ELECT	2200uF	20%	10V
C957	1-164-232-11	CERAMIC CHIP	0.01uF		50V

< JACK >

CNJ502	1-568-236-21	CONNECTOR, FPC (1.0MM) (ZIF) 11P	
CNJ503	1-691-280-11	CONNECTOR	
CNJ901	1-566-531-11	CONNECTOR, FPC (ZIF) 15P	
CNJ902	1-566-531-11	CONNECTOR, FPC (ZIF) 15P	
* CNJ903	1-569-630-11	SOCKET, CONNECTOR 9P	

MAIN

Ref. No.	Part No.	Description	Remark
		< CONNECTOR >	
* CNP301	1-506-991-11	PIN, CONNECTOR (PC BOARD) 9P	
* CNP302	1-506-985-11	PIN, CONNECTOR (PC BOARD) 3P	
* CNP501	1-566-006-11	PIN, CONNECTOR (PC BOARD) 9P	
* CNP504	1-506-998-11	PIN, CONNECTOR (PC BOARD) 2P	
* CNP601	1-506-986-11	PIN, CONNECTOR (PC BOARD) 4P	
		< DIODE >	
D101	8-719-105-58	DIODE RD3.9M-B2	
D102	8-719-110-02	DIODE RD7.5ES-B1	
D103	8-719-106-62	DIODE RD11M-B2	
D202	8-719-110-02	DIODE RD7.5ES-B1	
D203	8-719-106-62	DIODE RD11M-B2	
D303	8-719-106-62	DIODE RD11M-B2	
D501	8-719-110-33	DIODE RD12ES-B3	
D502	8-719-110-13	DIODE RD9.1ES-B2	
D503	8-719-105-91	DIODE RD5.6M-B2	
D504	8-719-105-91	DIODE RD5.6M-B2	
D505	8-719-911-19	DIODE 1SS119	
D506	8-719-400-18	DIODE MA152WK	
D507	8-719-400-18	DIODE MA152WK	
D508	8-719-400-18	DIODE MA152WK	
D509	8-719-104-34	DIODE 1S2836	
D510	8-719-120-78	DIODE RD6.2ES-L3	
D512	8-719-109-89	DIODE RD5.6ES-B2	
D513	8-719-110-13	DIODE RD9.1ES-B2	
D514	8-719-200-82	DIODE 11ES2	
D515	8-719-120-78	DIODE RD6.2ES-L3	
D516	8-719-106-99	DIODE RD16M-B3	
D517	8-719-120-78	DIODE RD6.2ES-L3	
D518	8-719-400-18	DIODE MA152WK	
D519	8-719-422-64	DIODE MA8062-M	
D520	8-719-104-34	DIODE 1S2836	
D530	8-719-422-64	DIODE MA8062-M	
D531	8-719-422-64	DIODE MA8062-M	
D532	8-719-422-64	DIODE MA8062-M	
D533	8-719-422-64	DIODE MA8062-M	
D534	8-719-422-64	DIODE MA8062-M	
D540	8-719-422-64	DIODE MA8062-M	
D541	8-719-108-24	DIODE 1SS223	
D542	8-719-422-64	DIODE MA-8062-M (E)	
D542	8-719-109-92	DIODE RD6.2ES-B1 (US, CND)	
D601	8-719-911-19	DIODE 1SS119	
D602	8-719-911-19	DIODE 1SS119	
D603	8-719-911-19	DIODE 1SS119	
D604	8-719-911-19	DIODE 1SS119	
D606	8-719-800-76	DIODE 1SS226	
D607	8-719-911-19	DIODE 1SS119	
D608	8-719-971-18	DIODE 1SS318	
D609	8-719-971-18	DIODE 1SS318	
D610	8-719-404-46	DIODE MA110 (E)	
D950	8-719-400-18	DIODE MA152WK	
D951	8-719-911-19	DIODE 1SS119	
D952	8-719-110-13	DIODE RD9.1ES-B2	
		< CONVERTER >	
DD1	1-466-655-12	CONVERTER, DC/DC	
		< TUNER UNIT >	
FE601	1-465-140-11	TUNER UNIT	
		< HIC >	
HIC601	1-808-515-11	IC NMX3S900	
		< IC >	
IC101	8-759-909-71	IC BA4558F	
IC102	8-759-909-71	IC BA4558F	
IC103	8-759-909-71	IC BA4558F	
IC104	8-759-909-71	IC BA4558F	
IC201	8-759-909-71	IC BA4558F	
IC202	8-759-909-71	IC BA4558F	
IC203	8-759-909-71	IC BA4558F	
IC204	8-759-909-71	IC BA4558F	
IC301	8-759-820-15	IC LC7537AN	
IC302	8-759-932-64	IC BU4052BF	
IC303	8-759-909-71	IC BA4558F	
IC304	8-759-048-67	IC BA3121F	
IC305	8-759-909-71	IC BA4558F	
IC501	8-759-981-65	IC LM2903M	
IC502	8-759-940-45	IC S-8054HN-CB	
IC503	8-759-421-13	IC AN8009N	
IC504	8-759-071-92	IC uPD75518GF-032-3B9	
IC601	8-759-066-24	IC uPD75116GF-F40-3BE	
IC602	8-759-513-42	IC X24C04SI	
IC603	8-759-823-81	IC LC7216M	
IC604	8-759-823-70	IC LA1060	
IC901	8-759-521-51	IC SM5861AS	
IC902	8-759-501-31	IC SM5840CS	
IC903	8-759-927-29	IC SN74HCU04ANS	
IC950	8-759-982-31	IC RC78M05FA	
IC951	8-759-982-07	IC RC7808FA	
IC952	8-759-802-76	IC LB1645N	

Ref.No.	Part No.	Description				Remark
		< JUMPER RESISTOR >				
JR502	1-216-295-00	METAL CHIP	0	5%	1/10W	
JR601	1-216-295-00	METAL CHIP	0	5%	1/10W	
JR602	1-216-295-00	METAL CHIP	0	5%	1/10W	
JR603	1-216-295-00	METAL CHIP	0	5%	1/10W	
JR604	1-216-295-00	METAL CHIP	0	5%	1/10W	(US, CND)
JR605	1-216-295-00	METAL CHIP	0	5%	1/10W	
JR902	1-216-295-00	METAL CHIP	0	5%	1/10W	(E)
JR903	1-216-295-00	METAL CHIP	0	5%	1/10W	(E)
		< COIL >				
L501	1-410-513-11	INDUCTOR	22uH			
L601	1-410-513-11	INDUCTOR	22uH			
L602	1-410-513-11	INDUCTOR	22uH			
L603	1-410-521-11	INDUCTOR	100uH			
L604	1-410-506-11	INDUCTOR	5.6uH			
L605	1-410-218-31	INDUCTOR CHIP	150uH			
L901	1-410-219-31	INDUCTOR CHIP	180uH			
L903	1-410-335-11	INDUCTOR	150uH			(US, CND)
		< TRANSISTOR >				
Q101	8-729-202-38	TRANSISTOR	2SC3326N			
Q102	8-729-202-38	TRANSISTOR	2SC3326N			
Q103	8-729-920-21	TRANSISTOR	DTC314TKH04			(E)
Q201	8-729-202-38	TRANSISTOR	2SC3326N			
Q202	8-729-202-38	TRANSISTOR	2SC3326N			
Q203	8-729-920-21	TRANSISTOR	DTC314TKH04			(E)
Q301	8-729-901-05	TRANSISTOR	DTA124EK			
Q302	8-729-901-00	TRANSISTOR	DTC124EK			
Q501	8-729-901-05	TRANSISTOR	DTA124EK			
Q502	8-729-901-00	TRANSISTOR	DTC124EK			
Q503	8-729-921-48	TRANSISTOR	2SD1760F5-Q			
Q504	8-729-921-48	TRANSISTOR	2SD1760F5-Q			
Q506	8-729-216-22	TRANSISTOR	2SA1162			
Q507	8-729-920-74	TRANSISTOR	2SC2412K-QR			
Q508	8-729-920-74	TRANSISTOR	2SC2412K-QR			
Q509	8-729-920-74	TRANSISTOR	2SC2412K-QR			
Q510	8-729-216-22	TRANSISTOR	2SA1162			
Q511	8-729-216-22	TRANSISTOR	2SA1162			
Q512	8-729-216-22	TRANSISTOR	2SA1162			
Q513	8-729-216-22	TRANSISTOR	2SA1162			
Q514	8-729-920-74	TRANSISTOR	2SC2412K-QR			
Q515	8-729-920-74	TRANSISTOR	2SC2412K-QR			
Q516	8-729-920-85	TRANSISTOR	2SD1664-QR			
Q517	8-729-105-29	TRANSISTOR	2SA1385			
Q518	8-729-901-00	TRANSISTOR	DTC124EK			
Q520	8-729-920-85	TRANSISTOR	2SD1664-QR			
Q521	8-729-105-29	TRANSISTOR	2SA1385			
Q522	8-729-901-00	TRANSISTOR	DTC124EK			
Q523	8-729-921-48	TRANSISTOR	2SD1760F5-Q			
Q524	8-729-920-74	TRANSISTOR	2SC2412K-QR			
Q525	8-729-920-74	TRANSISTOR	2SC2412K-QR			
Q526	8-729-901-01	TRANSISTOR	DTC144EK			
Q528	8-729-901-00	TRANSISTOR	DTC124EK			
Q529	8-729-920-74	TRANSISTOR	2SC2412K-QR			
Q530	8-729-920-74	TRANSISTOR	2SC2412K-QR			
Q531	8-729-920-74	TRANSISTOR	2SC2412K-QR			
Q532	8-729-901-00	TRANSISTOR	DTC124EK			
Q533	8-729-901-00	TRANSISTOR	DTC124EK			
Q534	8-729-901-01	TRANSISTOR	DTC144EK			
Q535	8-729-901-00	TRANSISTOR	DTC124EK			
Q602	8-729-216-22	TRANSISTOR	2SA1162			
Q603	8-729-106-60	TRANSISTOR	2SB1115A			
Q604	8-729-809-71	TRANSISTOR	2SK536			
Q608	8-729-920-74	TRANSISTOR	2SC2412K-QR			
Q609	8-729-920-74	TRANSISTOR	2SC2412K-QR			
Q611	8-729-901-05	TRANSISTOR	DTA124EK			
Q612	8-729-920-74	TRANSISTOR	2SC2412K-QR			
Q613	8-729-920-74	TRANSISTOR	2SC2412K-QR			
Q614	8-729-901-00	TRANSISTOR	DTC124EK			
Q615	8-729-901-00	TRANSISTOR	DTC124EK			
Q950	8-729-105-29	TRANSISTOR	2SA1385			
Q951	8-729-920-21	TRANSISTOR	DTC314TKH04			
Q952	8-729-106-60	TRANSISTOR	2SB1115A			
Q953	8-729-105-29	TRANSISTOR	2SA1385			
Q954	8-729-901-01	TRANSISTOR	DTC144EK			
Q956	8-729-900-98	TRANSISTOR	DTC143TK			
		< RESISTOR >				
R102	1-216-057-00	METAL CHIP	2.2K	5%	1/10W	
R103	1-216-073-00	METAL CHIP	10K	5%	1/10W	
R104	1-216-057-00	METAL CHIP	2.2K	5%	1/10W	
R105	1-216-073-00	METAL CHIP	10K	5%	1/10W	
R106	1-216-083-00	METAL CHIP	27K	5%	1/10W	
R107	1-216-073-00	METAL CHIP	10K	5%	1/10W	
R108	1-216-121-00	METAL CHIP	1M	5%	1/10W	
R109	1-216-083-00	METAL CHIP	27K	5%	1/10W	
R110	1-216-073-00	METAL CHIP	10K	5%	1/10W	
R111	1-216-121-00	METAL CHIP	1M	5%	1/10W	
R112	1-249-331-11	CARBON MELF	470	5%	1/8W	
R113	1-216-077-00	METAL CHIP	15K	5%	1/10W	
R114	1-216-061-00	METAL CHIP	3.3K	5%	1/10W	
R115	1-216-121-00	METAL CHIP	1M	5%	1/10W	
R116	1-216-121-00	METAL CHIP	1M	5%	1/10W	
R117	1-216-089-00	METAL CHIP	47K	5%	1/10W	
R118	1-216-081-00	METAL CHIP	22K	5%	1/10W	
R119	1-216-069-00	METAL CHIP	6.8K	5%	1/10W	
R120	1-216-067-00	METAL CHIP	5.6K	5%	1/10W	
R121	1-216-081-00	METAL CHIP	22K	5%	1/10W	

MAIN

Ref. No.	Part No.	Description			Remark
R122	1-216-081-00	METAL CHIP	22K	5%	1/10W
R123	1-216-077-00	METAL CHIP	15K	5%	1/10W
R124	1-216-073-00	METAL CHIP	10K	5%	1/10W
R125	1-216-077-00	METAL CHIP	15K	5%	1/10W
R126	1-216-073-00	METAL CHIP	10K	5%	1/10W
R127	1-216-085-00	METAL CHIP	33K	5%	1/10W (E)
R127	1-216-081-00	METAL CHIP	22K	5%	1/10W (US, CND)
R128	1-216-073-00	METAL CHIP	10K	5%	1/10W
R129	1-216-089-00	METAL CHIP	47K	5%	1/10W
R130	1-216-025-00	METAL CHIP	100	5%	1/10W
R131	1-216-071-00	METAL CHIP	8.2K	5%	1/10W
R132	1-216-073-00	METAL CHIP	10K	5%	1/10W
R133	1-216-089-00	METAL CHIP	47K	5%	1/10W
R134	1-216-067-00	METAL CHIP	5.6K	5%	1/10W
R135	1-216-073-00	METAL CHIP	10K	5%	1/10W
R136	1-216-073-00	METAL CHIP	10K	5%	1/10W
R139	1-216-089-00	METAL CHIP	47K	5%	1/10W
R139	1-216-089-00	METAL CHIP	47K	5%	1-10W
R202	1-216-057-00	METAL CHIP	2.2K	5%	1/10W
R203	1-216-073-00	METAL CHIP	10K	5%	1/10W
R204	1-216-057-00	METAL CHIP	2.2K	5%	1/10W
R205	1-216-073-00	METAL CHIP	10K	5%	1/10W
R206	1-216-083-00	METAL CHIP	27K	5%	1/10W
R207	1-216-073-00	METAL CHIP	10K	5%	1/10W
R208	1-216-121-00	METAL CHIP	1M	5%	1/10W
R209	1-216-083-00	METAL CHIP	27K	5%	1/10W
R210	1-216-073-00	METAL CHIP	10K	5%	1/10W
R211	1-216-121-00	METAL CHIP	1M	5%	1/10W
R212	1-249-331-11	CARBON MELF	470	5%	1/8W
R213	1-216-077-00	METAL CHIP	15K	5%	1/10W
R214	1-216-061-00	METAL CHIP	3.3K	5%	1/10W
R215	1-216-121-00	METAL CHIP	1M	5%	1/10W
R216	1-216-121-00	METAL CHIP	1M	5%	1/10W
R217	1-216-089-00	METAL CHIP	47K	5%	1/10W
R218	1-216-081-00	METAL CHIP	22K	5%	1/10W
R219	1-216-069-00	METAL CHIP	6.8K	5%	1/10W
R220	1-216-067-00	METAL CHIP	5.6K	5%	1/10W
R221	1-216-081-00	METAL CHIP	22K	5%	1/10W
R222	1-216-081-00	METAL CHIP	22K	5%	1/10W
R223	1-216-077-00	METAL CHIP	15K	5%	1/10W
R224	1-216-073-00	METAL CHIP	10K	5%	1/10W
R225	1-216-077-00	METAL CHIP	15K	5%	1/10W
R226	1-216-073-00	METAL CHIP	10K	5%	1/10W
R227	1-216-085-00	METAL CHIP	33K	5%	1/10W (E)
R227	1-216-081-00	METAL CHIP	22K	5%	1/10W (US, CND)
R228	1-216-073-00	METAL CHIP	10K	5%	1/10W

Ref. No.	Part No.	Description			Remark
R229	1-216-089-00	METAL CHIP	47K	5%	1/10W
R230	1-216-025-00	METAL CHIP	100	5%	1/10W
R231	1-216-071-00	METAL CHIP	8.2K	5%	1/10W
R232	1-216-073-00	METAL CHIP	10K	5%	1/10W
R233	1-216-089-00	METAL CHIP	47K	5%	1/10W
R234	1-216-067-00	METAL CHIP	5.6K	5%	1/10W
R235	1-216-073-00	METAL CHIP	10K	5%	1/10W
R236	1-216-073-00	METAL CHIP	10K	5%	1/10W
R239	1-216-089-00	METAL CHIP	47K	5%	1/10W
R301	1-216-097-00	METAL CHIP	100K	5%	1/10W
R302	1-216-089-00	METAL CHIP	47K	5%	1/10W
R303	1-216-089-00	METAL CHIP	47K	5%	1/10W
R304	1-216-121-00	METAL CHIP	1M	5%	1/10W
R305	1-216-073-00	METAL CHIP	10K	5%	1/10W
R306	1-216-073-00	METAL CHIP	10K	5%	1/10W
R307	1-216-043-00	METAL CHIP	560	5%	1/10W
R501	1-216-051-00	METAL CHIP	1.2K	5%	1/10W
R502	1-216-051-00	METAL CHIP	1.2K	5%	1/10W
R503	1-216-089-00	METAL CHIP	47K	5%	1/10W
R504	1-216-025-00	METAL CHIP	100	5%	1/10W
R505	1-216-089-00	METAL CHIP	47K	5%	1/10W
R506	1-216-025-00	METAL CHIP	100	5%	1/10W
R507	1-216-025-00	METAL CHIP	100	5%	1/10W
R508	1-216-089-00	METAL CHIP	47K	5%	1/10W
R509	1-216-089-00	METAL CHIP	47K	5%	1/10W
R510	1-216-089-00	METAL CHIP	47K	5%	1/10W
R511	1-216-049-00	METAL CHIP	1K	5%	1/10W
R512	1-216-089-00	METAL CHIP	47K	5%	1/10W
R513	1-216-089-00	METAL CHIP	47K	5%	1/10W
R514	1-216-089-00	METAL CHIP	47K	5%	1/10W
R515	1-216-073-00	METAL CHIP	10K	5%	1/10W
R516	1-216-081-00	METAL CHIP	22K	5%	1/10W
R517	1-216-073-00	METAL CHIP	10K	5%	1/10W
R518	1-216-081-00	METAL CHIP	22K	5%	1/10W
R519	1-216-063-00	METAL CHIP	3.9K	5%	1/10W
R520	1-216-081-00	METAL CHIP	22K	5%	1/10W
R521	1-216-065-00	METAL CHIP	4.7K	5%	1/10W
R522	1-216-089-00	METAL CHIP	47K	5%	1/10W
R523	1-216-089-00	METAL CHIP	47K	5%	1/10W
R524	1-216-097-00	METAL CHIP	100K	5%	1/10W
R525	1-216-097-00	METAL CHIP	100K	5%	1/10W
R526	1-216-049-00	METAL CHIP	1K	5%	1/10W
R527	1-216-089-00	METAL CHIP	47K	5%	1/10W
R528	1-216-089-00	METAL CHIP	47K	5%	1/10W
R529	1-216-089-00	METAL CHIP	47K	5%	1/10W
R530	1-216-089-00	METAL CHIP	47K	5%	1/10W
R531	1-216-089-00	METAL CHIP	47K	5%	1/10W
R532	1-216-089-00	METAL CHIP	47K	5%	1/10W
R533	1-216-097-00	METAL CHIP	100K	5%	1/10W
R534	1-216-073-00	METAL CHIP	10K	5%	1/10W

Ref. No.	Part No.	Description			Remark
R535	1-216-073-00	METAL CHIP	10K	5%	1/10W
R536	1-216-073-00	METAL CHIP	10K	5%	1/10W
R537	1-216-081-00	METAL CHIP	22K	5%	1/10W
R538	1-216-081-00	METAL CHIP	22K	5%	1/10W
R539	1-216-097-00	METAL CHIP	100K	5%	1/10W
R541	1-216-089-00	METAL CHIP	47K	5%	1/10W
R542	1-216-073-00	METAL CHIP	10K	5%	1/10W
R543	1-216-073-00	METAL CHIP	10K	5%	1/10W
R544	1-216-206-00	METAL GLAZE	2.2K	5%	1/8W
R545	1-216-206-00	METAL GLAZE	2.2K	5%	1/8W
R546	1-216-206-00	METAL GLAZE	2.2K	5%	1/8W
R548	1-216-057-00	METAL CHIP	2.2K	5%	1/10W
R549	1-216-073-00	METAL CHIP	10K	5%	1/10W
R550	1-216-206-00	METAL GLAZE	2.2K	5%	1/8W
R551	1-216-206-00	METAL GLAZE	2.2K	5%	1/8W
R552	1-216-206-00	METAL GLAZE	2.2K	5%	1/8W
R553	1-216-051-00	METAL CHIP	1.2K	5%	1/10W
R554	1-216-097-00	METAL CHIP	100K	5%	1/10W
R555	1-216-097-00	METAL CHIP	100K	5%	1/10W
R557	1-216-089-00	METAL CHIP	47K	5%	1/10W
R558	1-216-105-00	METAL CHIP	220K	5%	1/10W
R559	1-216-083-00	METAL CHIP	27K	5%	1/10W
R560	1-216-089-00	METAL CHIP	47K	5%	1/10W
R561	1-216-067-00	METAL CHIP	5.6K	5%	1/10W
R564	1-216-073-00	METAL CHIP	10K	5%	1/10W
R565	1-216-049-00	METAL CHIP	1K	5%	1/10W
R567	1-216-097-00	METAL CHIP	100K	5%	1/10W
R568	1-216-097-00	METAL CHIP	100K	5%	1/10W
R569	1-216-097-00	METAL CHIP	100K	5%	1/10W
R570	1-216-097-00	METAL CHIP	100K	5%	1/10W
R571	1-216-077-00	METAL CHIP	15K	5%	1/10W
R572	1-216-067-00	METAL CHIP	5.6K	5%	1/10W
R573	1-216-073-00	METAL CHIP	10K	5%	1/10W
R574	1-216-073-00	METAL CHIP	10K	5%	1/10W
R575	1-216-073-00	METAL CHIP	10K	5%	1/10W
R576	1-216-073-00	METAL CHIP	10K	5%	1/10W
R577	1-216-097-00	METAL CHIP	100K	5%	1/10W
R578	1-216-035-00	METAL CHIP	270	5%	1/10W
R601	1-216-089-00	METAL CHIP	47K	5%	1/10W
R602	1-216-097-00	METAL CHIP	100K	5%	1/10W
R603	1-216-097-00	METAL CHIP	100K	5%	1/10W
R604	1-216-097-00	METAL CHIP	100K	5%	1/10W
R605	1-216-097-00	METAL CHIP	100K	5%	1/10W
R606	1-216-097-00	METAL CHIP	100K	5%	1/10W
R607	1-216-097-00	METAL CHIP	100K	5%	1/10W
R608	1-216-073-00	METAL CHIP	10K	5%	1/10W
R610	1-216-057-00	METAL CHIP	2.2K	5%	1/10W
R611	1-216-059-00	METAL CHIP	2.7K	5%	1/10W
R612	1-216-073-00	METAL CHIP	10K	5%	1/10W
R613	1-216-059-00	METAL CHIP	2.7K	5%	1/10W

Ref. No.	Part No.	Description			Remark
R614	1-216-073-00	METAL CHIP	10K	5%	1/10W
R615	1-216-049-00	METAL CHIP	1K	5%	1/10W
R616	1-216-073-00	METAL CHIP	10K	5%	1/10W
R617	1-216-049-00	METAL CHIP	1K	5%	1/10W
R618	1-216-049-00	METAL CHIP	1K	5%	1/10W
R619	1-216-041-00	METAL CHIP	470	5%	1/10W
R620	1-216-073-00	METAL CHIP	10K	5%	1/10W
R621	1-216-073-00	METAL CHIP	10K	5%	1/10W
R625	1-216-061-00	METAL CHIP	3.3K	5%	1/10W
R626	1-216-061-00	METAL CHIP	3.3K	5%	1/10W
R627	1-216-073-00	METAL CHIP	10K	5%	1/10W
R628	1-216-073-00	METAL CHIP	10K	5%	1/10W
R629	1-216-065-00	METAL CHIP	4.7K	5%	1/10W
R630	1-216-061-00	METAL CHIP	3.3K	5%	1/10W
R631	1-216-065-00	METAL CHIP	4.7K	5%	1/10W
R632	1-216-051-00	METAL CHIP	1.2K	5%	1/10W
R633	1-216-073-00	METAL CHIP	10K	5%	1/10W
R634	1-216-059-00	METAL CHIP	2.7K	5%	1/10W
R635	1-216-080-00	METAL CHIP	20K	5%	1/10W
R636	1-216-089-00	METAL CHIP	47K	5%	1/10W
R637	1-216-067-00	METAL CHIP	5.6K	5%	1/10W
R638	1-216-085-00	METAL CHIP	33K	5%	1/10W
R639	1-216-085-00	METAL CHIP	33K	5%	1/10W
R640	1-216-079-00	METAL CHIP	18K	5%	1/10W
R641	1-216-089-00	METAL CHIP	47K	5%	1/10W
R642	1-216-097-00	METAL CHIP	100K	5%	1/10W
R643	1-216-097-00	METAL CHIP	100K	5%	1/10W
R644	1-216-089-00	METAL CHIP	47K	5%	1/10W
R645	1-216-113-00	METAL CHIP	470K	5%	1/10W
R646	1-216-097-00	METAL CHIP	100K	5%	1/10W
R647	1-216-053-00	METAL CHIP	1.5K	5%	1/10W
R648	1-216-095-00	METAL CHIP	82K	5%	1/10W
R649	1-216-049-00	METAL CHIP	1K	5%	1/10W
R650	1-216-748-11	METAL CHIP	39K	1%	1/10W
R651	1-216-067-00	METAL CHIP	5.6K	5%	1/10W
R652	1-216-065-00	METAL CHIP	4.7K	5%	1/10W
R653	1-216-065-00	METAL CHIP	4.7K	5%	1/10W
R654	1-216-057-00	METAL CHIP	2.2K	5%	1/10W
R655	1-216-073-00	METAL CHIP	10K	5%	1/10W
R656	1-216-097-00	METAL CHIP	100K	5%	1/10W
R674	1-216-073-00	METAL CHIP	10K	5%	1/10W (US, CND)
R675	1-216-089-00	METAL CHIP	47K	5%	1/10W
R676	1-216-089-00	METAL CHIP	47K	5%	1/10W
R677	1-216-089-00	METAL CHIP	47K	5%	1/10W
R678	1-216-089-00	METAL CHIP	47K	5%	1/10W
R679	1-216-089-00	METAL CHIP	47K	5%	1/10W
R680	1-216-089-00	METAL CHIP	47K	5%	1/10W
R902	1-216-037-00	METAL CHIP	330	5%	1/10W
R903	1-216-037-00	METAL CHIP	330	5%	1/10W

Ref.No.	Part No.	Description			Remark
R904	1-216-037-00	METAL CHIP	330	5%	1/10W
R905	1-216-037-00	METAL CHIP	330	5%	1/10W
R906	1-216-037-00	METAL CHIP	330	5%	1/10W
R907	1-216-037-00	METAL CHIP	330	5%	1/10W
R908	1-216-037-00	METAL CHIP	330	5%	1/10W
R915	1-216-073-00	METAL CHIP	10K	5%	1/10W
R916	1-216-037-00	METAL CHIP	330	5%	1/10W
R918	1-216-121-00	METAL CHIP	1M	5%	1/10W
R920	1-216-041-00	METAL CHIP	470	5%	1/10W (US, CND)
R950	1-216-073-00	METAL CHIP	10K	5%	1/10W
R951	1-216-206-00	METAL GLAZE	2.2K	5%	1/8W
R952	1-216-206-00	METAL GLAZE	2.2K	5%	1/8W
R953	1-216-206-00	METAL GLAZE	2.2K	5%	1/8W
R954	1-216-073-00	METAL CHIP	10K	5%	1/10W
R955	1-216-051-00	METAL CHIP	1.2K	5%	1/10W
R956	1-216-045-00	METAL CHIP	680	5%	1/10W
R957	1-216-073-00	METAL CHIP	10K	5%	1/10W
R961	1-216-097-00	METAL CHIP	100K	5%	1/10W
R962	1-216-097-00	METAL CHIP	100K	5%	1/10W
R963	1-216-097-00	METAL CHIP	100K	5%	1/10W
R964	1-216-097-00	METAL CHIP	100K	5%	1/10W
R965	1-216-027-00	METAL CHIP	120	5%	1/10W
R966	1-216-001-00	METAL CHIP	10	5%	1/10W
R969	1-216-085-00	METAL CHIP	33K	5%	1/10W

< VARIABLE RESISTOR >

RV601	1-238-207-11	RES, ADJ, METAL GLAZE 100K
RV602	1-238-204-11	RES, ADJ, METAL GLAZE 10K
RV603	1-238-204-11	RES, ADJ, METAL GLAZE 10K

< SWITCH >

SW501	1-571-426-11	SWITCH, SLIDE
SW601	1-571-426-11	SWITCH, SLIDE
SW602	1-571-426-11	SWITCH, SLIDE (E)

< THERMISTOR >

TH501	1-809-148-11	THERMISTOR, POSITIVE
TH502	1-809-148-11	THERMISTOR, POSITIVE

< VIBRATOR >

X501	1-567-776-21	VIBRATOR, CERAMIC (6.0MHz)
X502	1-579-532-11	VIBLATOR, CRYSTAL (32.768KHz)
X601	1-567-775-11	VIBRATOR, CERAMIC (4.19MHz)
X602	1-567-848-11	VIBRATOR, CRYSTAL (7.2MHz)
X603	1-567-250-11	OSCILLATOR, CERAMIC
X901	1-567-820-11	VIBRATOR, CRYSTAL (16MHz)

****

Ref.No.	Part No.	Description	Remark
*	A-3279-978-A	RF BOARD, COMPLETE	
		**********	

< CAPACITOR >

C1	1-135-166-21	TANTALUM CHIP 47uF	10%	10V
C2	1-164-232-11	CERAMIC CHIP 0.01uF		50V
C2	1-126-599-11	ELECT 330uF	20%	6.3V
C4	1-163-989-11	CERAMIC CHIP 0.033uF	10%	25V
C5	1-163-009-11	CERAMIC CHIP 0.001uF	10%	50V
C6	1-163-009-11	CERAMIC CHIP 0.001uF	10%	50V
C7	1-163-078-11	CERAMIC CHIP 0.033uF	10%	25V
C8	1-163-059-00	CERAMIC CHIP 0.01uF	10%	50V
C9	1-126-593-11	ELECT CHIP 0.47uF	20%	50V
C10	1-164-232-11	CERAMIC CHIP 0.01uF		50V
C11	1-164-232-11	CERAMIC CHIP 0.01uF		50V
C12	1-164-232-11	CERAMIC CHIP 0.01uF		50V
C13	1-126-593-11	ELECT CHIP 0.47uF	20%	50V
C14	1-164-004-11	CERAMIC CHIP 0.1uF	10%	25V
C15	1-163-009-11	CERAMIC CHIP 0.001uF	10%	50V
C16	1-126-590-11	ELECT CHIP 22uF	20%	4V
C17	1-163-017-00	CERAMIC CHIP 0.0047uF	5%	50V
C18	1-164-004-11	CERAMIC CHIP 0.1uF	10%	25V
C19	1-163-989-11	CERAMIC CHIP 0.033uF	10%	25V
C20	1-126-592-11	ELECT CHIP 4.7uF	20%	16V
C21	1-164-004-11	CERAMIC CHIP 0.1uF	10%	25V
C22	1-164-004-11	CERAMIC CHIP 0.1uF	10%	25V
C23	1-126-591-11	ELECT CHIP 10uF	20%	6.3V
C24	1-126-594-11	ELECT CHIP 1uF	20%	50V
C25	1-126-594-11	ELECT CHIP 1uF	20%	50V
C26	1-163-007-00	CERAMIC CHIP 0.1uF	10%	25V
C27	1-163-077-00	CERAMIC CHIP 0.1uF	10%	25V
C29	1-126-590-11	ELECT CHIP 22uF	20%	4V
C30	1-126-590-11	ELECT CHIP 22uF	20%	4V
C31	1-126-590-11	ELECT CHIP 22uF	20%	4V
C34	1-163-809-11	CERAMIC CHIP 0.047uF	10%	25V
C35	1-163-017-00	CERAMIC CHIP 0.0047uF	5%	50V
C36	1-126-592-11	ELECT CHIP 4.7uF	20%	16V
C37	1-126-591-11	ELECT CHIP 10uF	20%	6.3V
C38	1-162-638-11	CERAMIC CHIP 1uF		16V
C39	1-162-638-11	CERAMIC CHIP 1uF		16V
C40	1-126-176-11	ELECT 220uF	20%	10V
C99	1-163-009-11	CERAMIC CHIP 0.001uF	10%	50V

< CONNECTOR >

CNJ11	1-568-141-11	HOUSING, CONNECTOR 5P
CNJ12	1-568-142-11	HOUSING, CONNECTOR 13P
CNJ13	1-566-531-11	CONNECTOR, FPC (ZIF) 15P
CNJ14	1-566-531-11	CONNECTOR, FPC (ZIF) 15P
* CNP10	1-506-990-11	PIN, CONNECTOR (PC BOARD) 8P

Ref.No.	Part No.	Description			Remark
		< IC >			
IC1	8-752-033-14	IC CXA1081Q			
IC2	8-752-037-50	IC CXA1082BQ			
IC3	8-752-335-91	IC CXD1167Q			
IC4	8-759-821-76	IC LA6533			
IC5	8-759-821-76	IC LA6533			
		< JUMPER RESISTOR >			
JR1	1-216-296-00	METAL CHIP	0	5% 1/8W	
JR2	1-216-296-00	METAL CHIP	0	5% 1/8W	
JR3	1-216-296-00	METAL CHIP	0	5% 1/8W	
JR4	1-216-296-00	METAL CHIP	0	5% 1/8W	
JR5	1-216-296-00	METAL CHIP	0	5% 1/8W	
JR6	1-216-296-00	METAL CHIP	0	5% 1/8W	
JR7	1-216-296-00	METAL CHIP	0	5% 1/8W	
JR8	1-216-296-00	METAL CHIP	0	5% 1/8W	
JR9	1-216-296-00	METAL CHIP	0	5% 1/8W	
JR10	1-216-296-00	METAL CHIP	0	5% 1/8W	
JR11	1-216-296-00	METAL CHIP	0	5% 1/8W	
JR12	1-216-296-00	METAL CHIP	0	5% 1/8W	
JR13	1-216-296-00	METAL CHIP	0	5% 1/8W	
JR14	1-216-296-00	METAL CHIP	0	5% 1/8W	
JR15	1-216-296-00	METAL CHIP	0	5% 1/8W	
JR16	1-216-296-00	METAL CHIP	0	5% 1/8W	
JR17	1-216-296-00	METAL CHIP	0	5% 1/8W	
JR18	1-216-296-00	METAL CHIP	0	5% 1/8W	
JR19	1-216-296-00	METAL CHIP	0	5% 1/8W	
JR20	1-216-296-00	METAL CHIP	0	5% 1/8W	
JR21	1-216-296-00	METAL CHIP	0	5% 1/8W	
JR22	1-216-296-00	METAL CHIP	0	5% 1/8W	
JR23	1-216-296-00	METAL CHIP	0	5% 1/8W	
JR24	1-216-296-00	METAL CHIP	0	5% 1/8W	
JR25	1-216-296-00	METAL CHIP	0	5% 1/8W	
JR26	1-216-296-00	METAL CHIP	0	5% 1/8W	
JR27	1-216-296-00	METAL CHIP	0	5% 1/8W	
JR28	1-216-296-00	METAL CHIP	0	5% 1/8W	
JR29	1-216-296-00	METAL CHIP	0	5% 1/8W	
JR30	1-216-296-00	METAL CHIP	0	5% 1/8W	
JR31	1-216-296-00	METAL CHIP	0	5% 1/8W	
JR32	1-216-296-00	METAL CHIP	0	5% 1/8W	
JR33	1-216-296-00	METAL CHIP	0	5% 1/8W	
JR34	1-216-296-00	METAL CHIP	0	5% 1/8W	
JR51	1-216-295-00	METAL CHIP	0	5% 1/10W	
JR52	1-216-295-00	METAL CHIP	0	5% 1/10W	
JR53	1-216-295-00	METAL CHIP	0	5% 1/10W	
JR54	1-216-295-00	METAL CHIP	0	5% 1/10W	
JR55	1-216-295-00	METAL CHIP	0	5% 1/10W	
JR56	1-216-295-00	METAL CHIP	0	5% 1/10W	
JR57	1-216-295-00	METAL CHIP	0	5% 1/10W	
JR58	1-216-295-00	METAL CHIP	0	5% 1/10W	
JR59	1-216-295-00	METAL CHIP	0	5% 1/10W	
JR60	1-216-295-00	METAL CHIP	0	5% 1/10W	
JR61	1-216-295-00	METAL CHIP	0	5% 1/10W	
JR62	1-216-295-00	METAL CHIP	0	5% 1/10W	
JR63	1-216-295-00	METAL CHIP	0	5% 1/10W	
JR64	1-216-295-00	METAL CHIP	0	5% 1/10W	
JR65	1-216-295-00	METAL CHIP	0	5% 1/10W	
		< COIL >			
L1	1-410-204-31	INDUCTOR CHIP	10uH		
L2	1-410-198-51	INDUCTOR CHIP	3.3uH		
		< TRANSISTOR >			
Q1	8-729-900-53	TRANSISTOR	DTC114EK		
Q2	8-729-900-53	TRANSISTOR	DTC114EK		
Q3	8-729-900-53	TRANSISTOR	DTC114EK		
Q4	8-729-141-48	TRANSISTOR	2SB624-BV345		
		< RESISTOR >			
R1	1-216-150-00	METAL GLAZE	10	5% 1/8W	
R2	1-216-081-00	METAL CHI	22K	5% 1/10W	
R3	1-216-057-00	METAL CHIP	2.2K	5% 1/10W	
R4	1-216-057-00	METAL CHIP	2.2K	5% 1/10W	
R5	1-216-081-00	METAL CHIP	22K	5% 1/10W	
R6	1-216-206-00	METAL GLAZE	2.2K	5% 1/8W	
R7	1-216-097-00	METAL CHIP	100K	5% 1/10W	
R8	1-216-073-00	METAL CHIP	10K	5% 1/10W	
R9	1-216-073-00	METAL CHIP	10K	5% 1/10W	
R10	1-216-073-00	METAL CHIP	10K	5% 1/10W	
R11	1-216-061-00	METAL CHIP	3.3K	5% 1/10W	
R12	1-216-103-00	METAL CHIP	180K	5% 1/10W	
R13	1-216-121-00	METAL CHIP	1M	5% 1/10W	
R14	1-216-105-00	METAL CHIP	220K	5% 1/10W	
R15	1-216-085-00	METAL CHIP	33K	5% 1/10W	
R16	1-216-085-00	METAL CHIP	33K	5% 1/10W	
R17	1-216-085-00	METAL CHIP	33K	5% 1/10W	
R18	1-216-081-00	METAL CHIP	22K	5% 1/10W	
R19	1-216-081-00	METAL CHIP	22K	5% 1/10W	
R20	1-216-085-00	METAL CHIP	33K	5% 1/10W	
R21	1-216-085-00	METAL CHIP	33K	5% 1/10W	
R22	1-216-097-00	METAL CHIP	100K	5% 1/10W	
R23	1-216-097-00	METAL CHIP	100K	5% 1/10W	
R24	1-216-103-00	METAL CHIP	180K	5% 1/10W	
R25	1-216-210-00	METAL GLAZE	3.3K	5% 1/8W	
R26	1-216-085-00	METAL CHIP	33K	5% 1/8W	
R27	1-216-085-00	METAL CHIP	33K	5% 1/8W	
R28	1-216-081-00	METAL CHIP	22K	5% 1/8W	

Ref.No.	Part No.	Description			Remark
R29	1-216-081-00	METAL CHIP	22K	5% 1/10W	
R30	1-216-085-00	METAL CHIP	33K	5% 1/10W	
R31	1-216-097-00	METAL CHIP	100K	5% 1/10W	
R32	1-216-076-00	METAL GLAZE	13K	5% 1/10W	
R33	1-216-076-00	METAL GLAZE	13K	5% 1/10W	
R34	1-216-059-00	METAL CHIP	2.7K	5% 1/10W	
R35	1-216-114-00	METAL GLAZE	510K	5% 1/10W	
R36	1-216-059-00	METAL CHIP	2.7K	5% 1/10W	
R37	1-216-103-00	METAL CHIP	180K	5% 1/10W	
R38	1-216-097-00	METAL CHIP	100K	5% 1/10W	
R39	1-216-097-00	METAL CHIP	100K	5% 1/10W	
R40	1-216-097-00	METAL CHIP	100K	5% 1/10W	
R41	1-216-073-00	METAL CHIP	10K	5% 1/10W	
R42	1-216-073-00	METAL CHIP	10K	5% 1/10W	
R43	1-216-198-00	METAL CHIP	1K	5% 1/8W	
R44	1-216-198-00	METAL CHIP	1K	5% 1/8W	
R45	1-216-198-00	METAL CHIP	1K	5% 1/8W	
R46	1-216-049-00	METAL CHIP	1K	5% 1/10W	
R47	1-216-229-00	METAL GLAZE	20K	5% 1/8W	
R48	1-216-220-00	METAL GLAZE	8.2K	5% 1/8W	
R49	1-216-246-00	METAL GLAZE	100K	5% 1/8W	
R51	1-216-081-00	METAL CHIP	22K	5% 1/10W	
R52	1-216-081-00	METAL CHIP	22K	5% 1/10W	
R53	1-216-081-00	METAL CHIP	22K	5% 1/10W	
R54	1-216-081-00	METAL CHIP	22K	5% 1/10W	
R55	1-216-124-00	METAL GLAZE	91	5% 1/10W	
		< VARIABLE RESISTOR >			
RV1	1-237-005-11	RES, ADJ, METAL GLAZE 22K			
RV2	1-238-206-11	RES, ADJ, METAL GLAZE 47K			
RV3	1-238-665-11	RES, ADJ, CERMET 22K			
RV4	1-238-665-11	RES, ADJ, CERMET 22K			
RV5	1-238-662-11	RES, ADJ, CERMET 2.2K			
		< THERMISTOR >			
TH1	1-808-656-11	THERMISTOR			
TH2	1-808-656-11	THERMISTOR			

****

MISCELLANEOUS

****

10	1-690-485-11	CORD (WITH CONNECTOR)	
11	1-690-212-21	CORD (WITH CONNECTOR)	(ANT)
12	1-690-483-11	CORD (WITH CONNECTOR)	
13	1-690-484-21	CORD (WITH CONNECTOR)	
* 19	1-563-470-11	HOUSING, CONNECTOR 2P	
320	1-554-938-11	SWITCH, LEAF, G, E)	
332	1-454-461-11	SOLENOID, PLUNGER	
M901	A-4910-183-A	MOTOR ASSY, SLED	
M902	1-541-448-41	MOTOR (SPINDLE)	
M903	1-541-560-11	MOTOR, DC	
S901	1-570-771-11	SWITCH (HOLDER ON/OFF)	

****

ACCESSORIES & PACKING MATERIALS

****

	X-3320-524-1	SCREW ASSY (A)
	X-3364-646-1	CASE ASSY
	1-690-486-11	CORD (WITH CONNECTOR)
	3-323-209-01	BOLT (4-5), STUD
	3-323-210-01	ADJUSTOR, STUD BOLT
	3-323-217-01	HOLDER, BUSHING
	3-323-219-01	FRAME, FITTING
	3-349-410-01	BUSHING
*	3-355-207-01	CARDBOARD (E)
*	3-374-199-01	COLLAR
	3-374-200-01	SPRING (FITTING)
*	3-376-450-01	CUSHION (UPPER)
*	3-376-451-01	CUSHION (LOWER)
*	3-377-794-01	INDIVIDUAL CARTON
	3-754-324-22	MANUAL, INSTRUCTION (Installation/Connections) (US, Canadian) (ENGLISH, FRENCH)
	3-754-325-21	MANUAL, INSTRUCTION (US, Canadian) (ENGLISH, FRENCH)
	3-754-324-51	MANUAL, INSTRUCTION (Installation/Connections) (E) (ENGLISH, SPANISH, CHINESE)
	3-754-325-51	MANUAL, INSTRUCTION (E) (ENGLISH, SPANISH, CHINESE)
	3-336-617-01	BAG, PROTECTION (E)
	3-310-655-01	SUPORT(ND), FITTING (E)
	3-376-995-01	CUSHON(W)
	3-376-549-01	HOLDER(WMF)

****

****

HARDWARE LIST

****

#1	7-627-853-57	PRECISION SCREW +P 2X5 TYPE3
#2	7-621-772-10	SCREW +B 2X4
#3	7-624-101-01	STOP RING 1.2 (E TYPE)
#4	7-685-103-19	SCREW +P 2X5 TYPE2 NON-SLIT
#5	7-627-104-04	STOP RING 2.0 TYPE-E
#6	7-627-553-28	SCREW, PRECISION +P 2X2.5
#7	7-627-553-37	SCREW, PRECISION +P 2X3
#8	7-627-552-18	SCREW, PRECISION +P 1.7X1.6
#9	7-621-772-08	SCREW +B 2X3
#10	7-627-850-57	SCREW, PRECISION +P 1.4X3.5
#11	7-627-553-17	PRECISION SCREW +P 2X2 TYPE3
#12	7-627-554-18	SCREW, PRECISION +P 2X3.5 TYPE1

Ref. No.	Part No.	Description	Remark
#13	7-627-451-17	SCREW, PRECISION +K 1.4X2.5	
#14	7-627-451-57	SCREW, PRECISION +K 1.4X4	
#15	7-627-852-17	+P 1.7X4	
#16	7-624-106-04	STOP RING 3.0 TYPE-E	
#17	7-627-552-08	SCREW, PRECISION +P 1.7X2.5	
#18	7-685-105-19	SCREW +P 2X8 TYPE2 NON-SLIT	
#19	7-621-770-87	SCREW +PTT 2.6X5 (S)	
#20	7-621-259-25	SCREW +P 2.6X4	

English
92D0613-1
Printed in Japan
©1992.4
Published by Customer Relations and Service Group

9-956-827-12

Sony Corporation
Mobile Electronics Group

CDX-U8000

SONY®
SERVICE MANUAL

US Model
Canadian Model
E Model

CORRECTION-1

Correct your service manual as shown below.

: **Indicates corrected portion.**

Page	INCORRECT	CORRECT
23	**FM S Meter Adjustment** 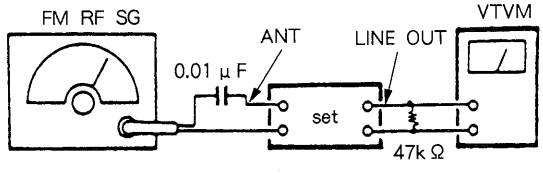 Carrier frequency : 97.9MHz (US, Canadian models) 98.0MHz (E model) Output level : 1mV (More than 35dB) Mode : FM Modulation : Pilot signal 19kHz, 7.5kHz deviation (10 %) **Procedure:** 1. Tune – up at US, Canadian models: 97.9MHz, E model: 98.0MHz 2. Adjust RV603 so that reading on VTVM is 2.0 ± 0.1V.	**FM S Meter Adjustment** 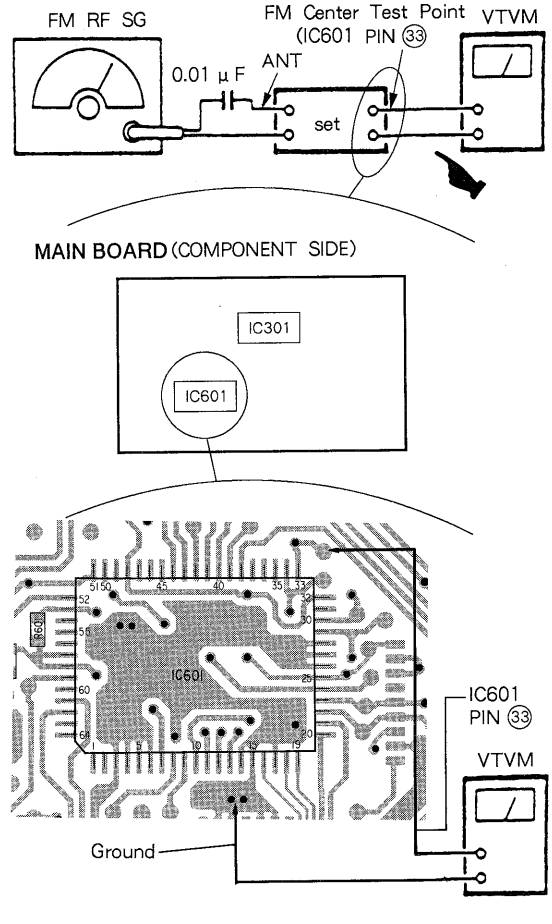 Carrier frequency : 97.9MHz (US, Canadian models) 98.0MHz (E model) Output level : 35dB (56.2 µV) Mode : FM Modulation : Pilot signal 19kHz, 7.5kHz deviation (10 %) **Procedure:** 1. Tune – up at US, Canadian models: 97.9MHz, E model: 98.0MHz 2. Adjust RV603 so that reading on VTVM is 2.0 ± 0.1V.

: addition portion.

Page	INCORRECT	CORRECT
24	**PLL free-run frequency adjustment** 1. Remove the soldering bridge (EFM) from the RF board. 2. Connect the frequency counter to test point (PLCK). 3. Turn the power on and adjust RV5 so that frequency counter reading satisfies the specification. Adjustable limits: 4.3118 to 4.3318MHz	**PLL free-run frequency adjustment** 1. Remove the soldering bridge (EFM) from the RF board. 2. Remove the flexible board from CNJ902 of main board. 3. Connect the frequency counter to test point (PLCK). 4. Connect the power supply, set mode to reset. 5. Adjust RV5 so that frequency counter reading satisfies the specification. Adjustable limits: 4.3118 to 4.3318MHz

9-956-827-91

Sony Corporation
Mobile Electronics Group

English
92J0638-1
Printed in Japan
©1992.10
Published by Audio Corporate Planning Group

CDX-U8000

SONY
SERVICE MANUAL

US Model
Canadian Model
E Model

CORRECTION-2

Correct your service manual as shown below.

☛ : indicates corrected portion.

Page	INCORRECT			CORRECT	
	No.	Part No.	Description	Part No.	Description
55	6	* A-3222-392-A	MAIN BOARD, COMPLETE	* A-3273-881-A	MAIN BOARD, COMPLETE (US, CND)
	6	A-3295-055-A	MAIN BOARD, COMPLETE (E)	* A-3295-055-A	MAIN BOARD, COMPLETE (E)
62		* A-3222-392-A	MAIN BOARD, COMPLETE	* A-3273-881-A	MAIN BOARD, COMPLETE (US, CND)
				* A-3295-055-A	MAIN BOARD, COMPLETE (E)

9-956-827-93

Sony Corporation
Mobile Electronics Group

English
93E0634-1
Printed in Japan
© 1993.5
Published by Audio Sector Quality Assurance Dept.